6402-16-12-O

Steel, SAE J514 37° Flare Swivel Port Connector, 1-5/16-12 Male ORB x 3/4" Female JIC Swivel

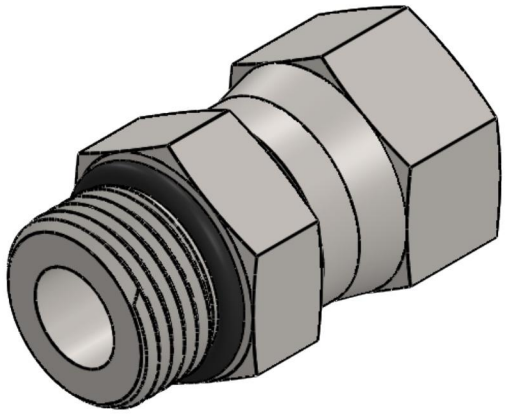

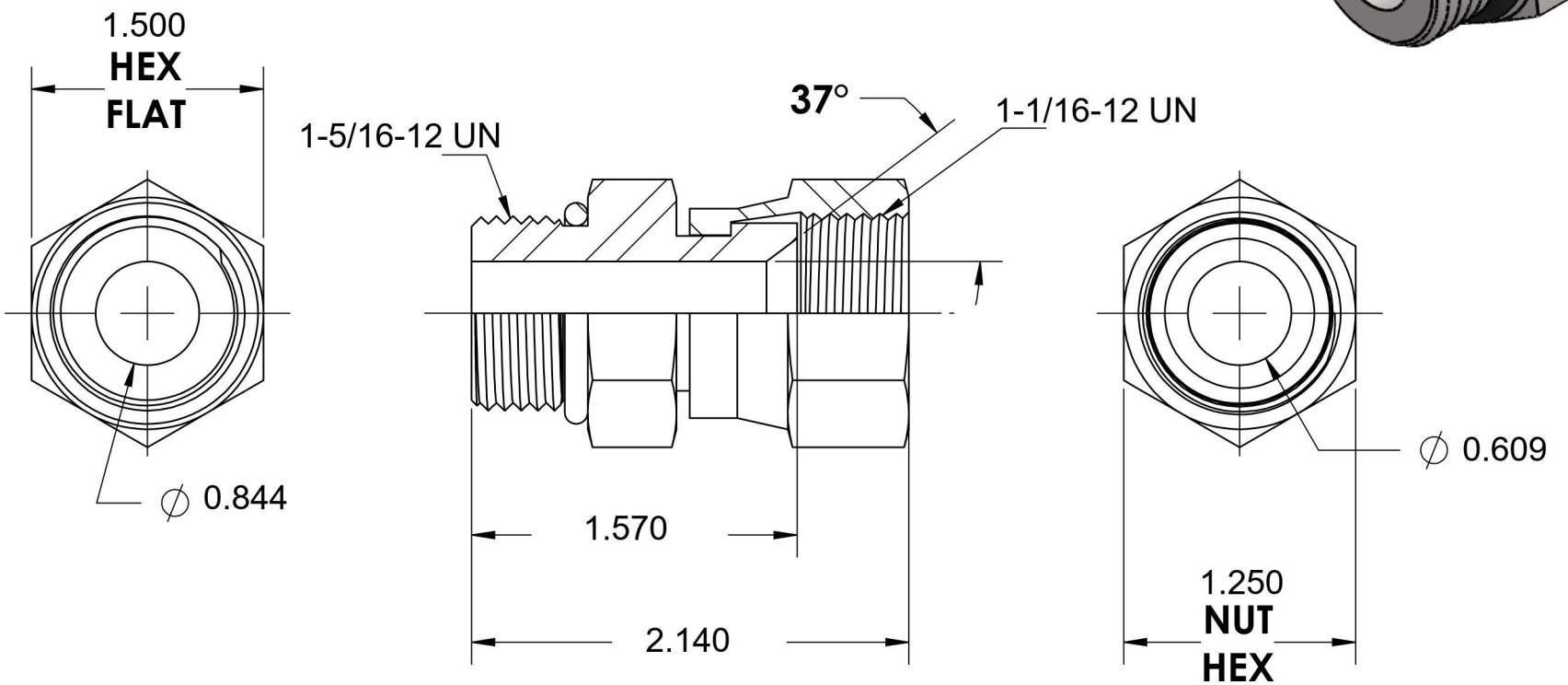

BRENNAN

6701 Cochran Road
Solon, Ohio 44139
Phone: (440) 248-1880
Toll Free: 1-888-331-1523

Temperature Rating	Material	Industry Standards	Series
-40°F to 250°F	C1045 / 12L14 Steel	SAE J514, SAE J1926-3 ASTM B633	6402-O
Pressure Rating	**Finish**		**Series Description**
4500 psi	Trivalent Zinc		SAE J514 37° Flare Swivel Port Connector