6900-04-06-O

Steel, SAE J514 NPSM Swivel Port Connector, 7/16-20 Male ORB x 3/8" Female NPSM Swivel

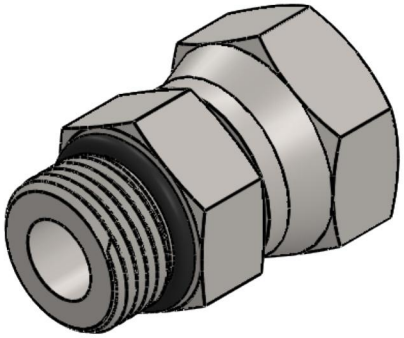

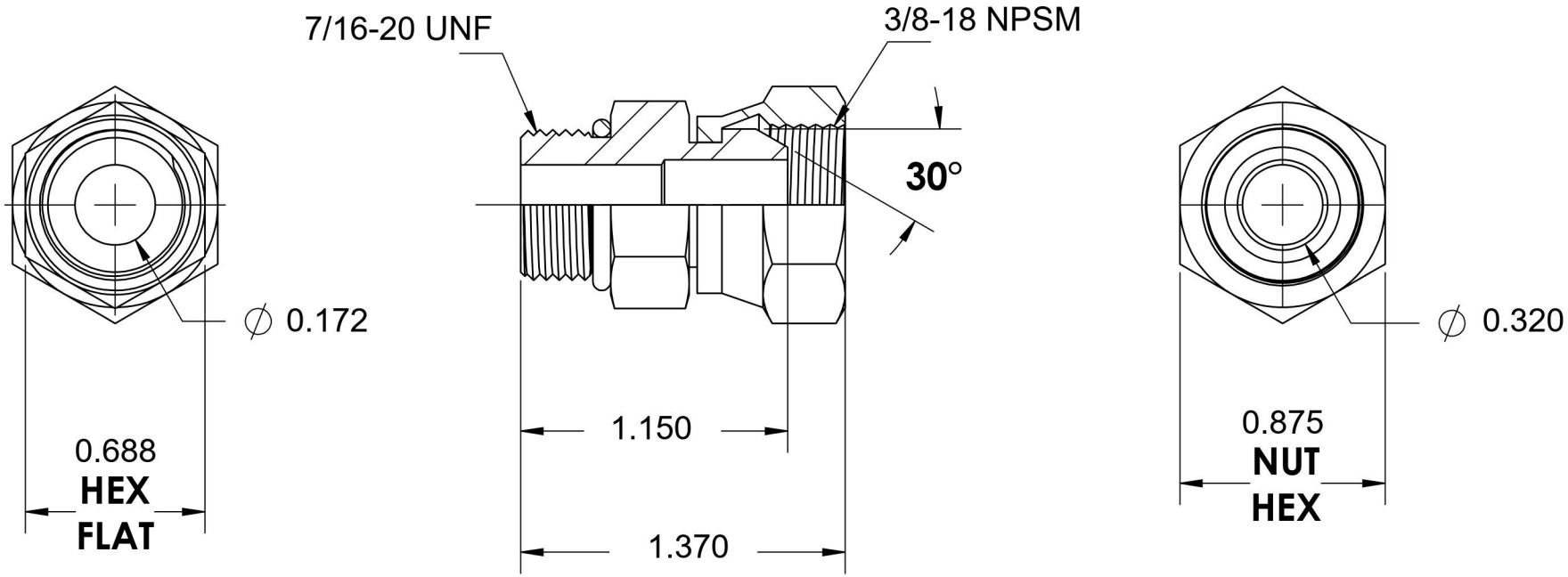

BRENNAN

6701 Cochran Road
Solon, Ohio 44139
Phone: (440) 248-1880
Toll Free: 1-888-331-1523

Temperature Rating	Material	Industry Standards	Series
-40°F to 250°F	C1045/12L14 Steel	SAE J514, SAE J476 SAE J1926-3, SAE J515 ASTM B633	6900-O
Pressure Rating	**Finish**		**Series Description**
6000 psi	Trivalent Zinc		SAE J514 NPSM Swivel Port Connector