1703-20-16-SS

Stainless Steel, SAE J514 37° Flare 45° Code 61 Flange Swept Elbow, 1-1/4" Male JIC x 1" Split Flange Head

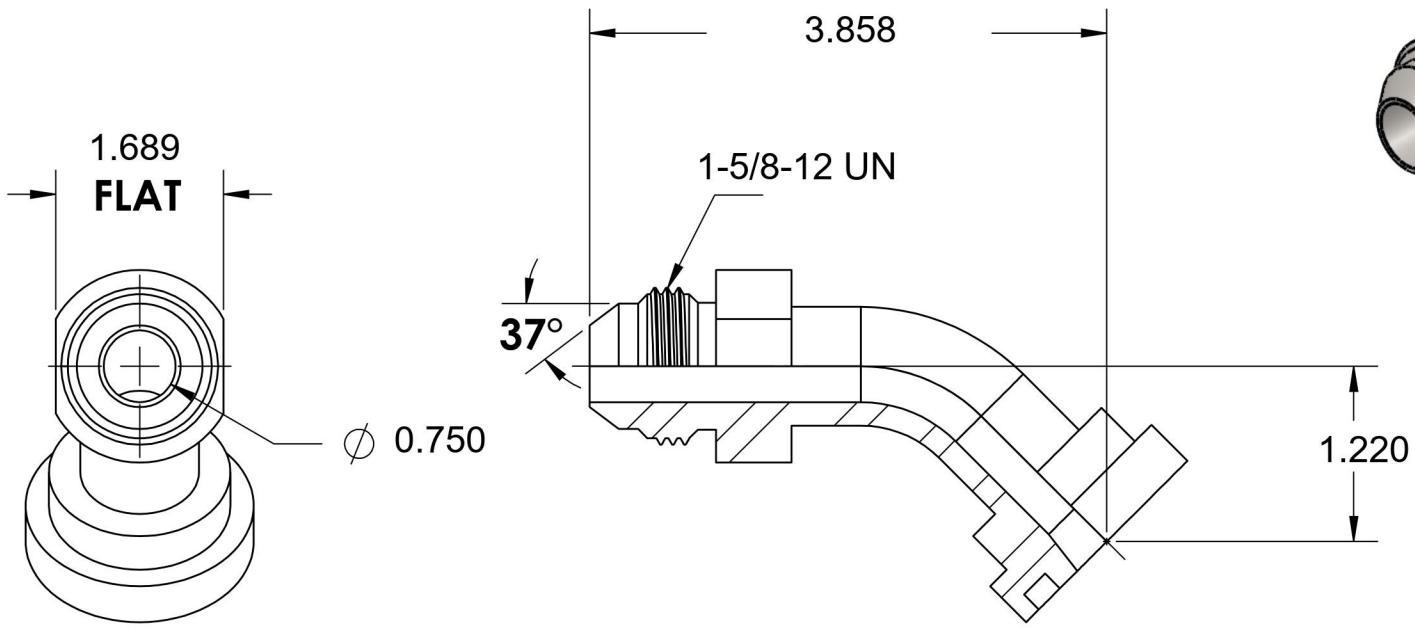

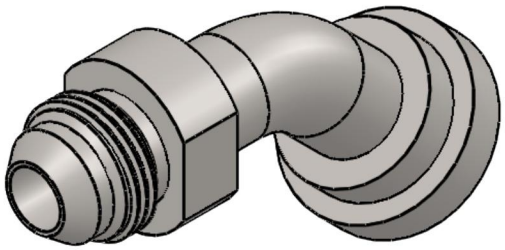

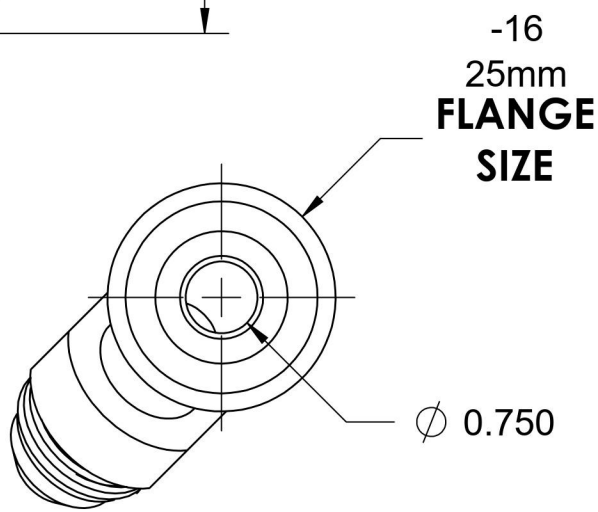

BRENNAN

6701 Cochran Road
Solon, Ohio 44139
Phone: (440) 248-1880
Toll Free: 1-888-331-1523

Temperature Rating	Material	Industry Standards	Series
-425°F to 1200°F	316/316L Stainless	SAE J518 Code 61, SAE J514	1703
Pressure Rating	**Finish**		**Series Description**
4000psi	Passivation		SAE J514 37° Flare 45° Code 61 Flange Swept Elbow