5406-P-16-B

Brass, SAE J531 Pipe Hex Head Plug, 1" Male NPTF

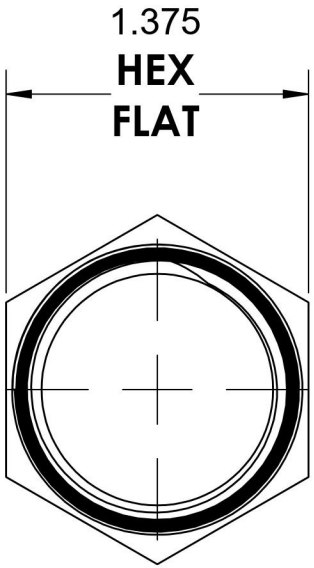

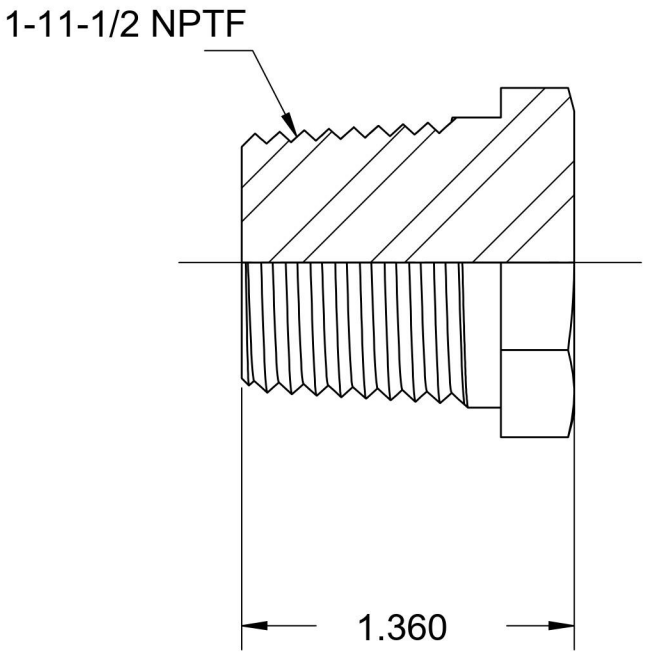

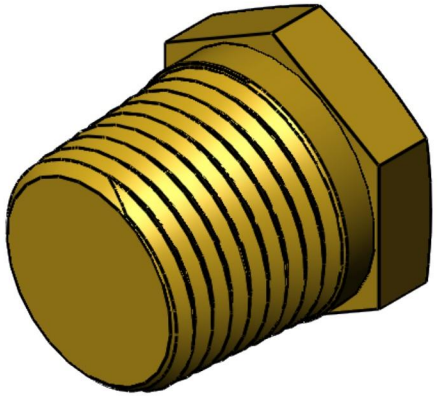

BRENNAN

6701 Cochran Road
Solon, Ohio 44139
Phone: (440) 248-1880
Toll Free: 1-888-331-1523

Temperature Rating	Material	Industry Standards	Series
-325°F to 400°F	C36000 Brass	SAE J531, SAE J476	5406-P-B
Pressure Rating	**Finish**		**Series Description**
3000 psi	Natural Finish		SAE J531 Pipe Hex Head Plug