7005-12-26-SS

Stainless Steel, SAE J514 37° Flare Male Metric Port/Line Connector, 3/4" Male JIC x M26X1.5 Male Metric 60° Line/Port

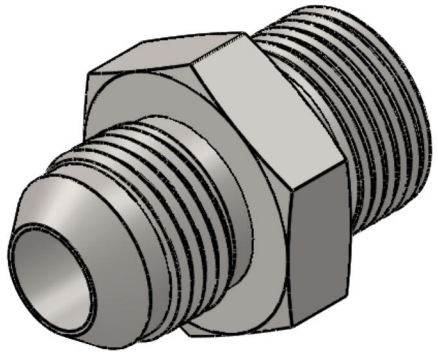

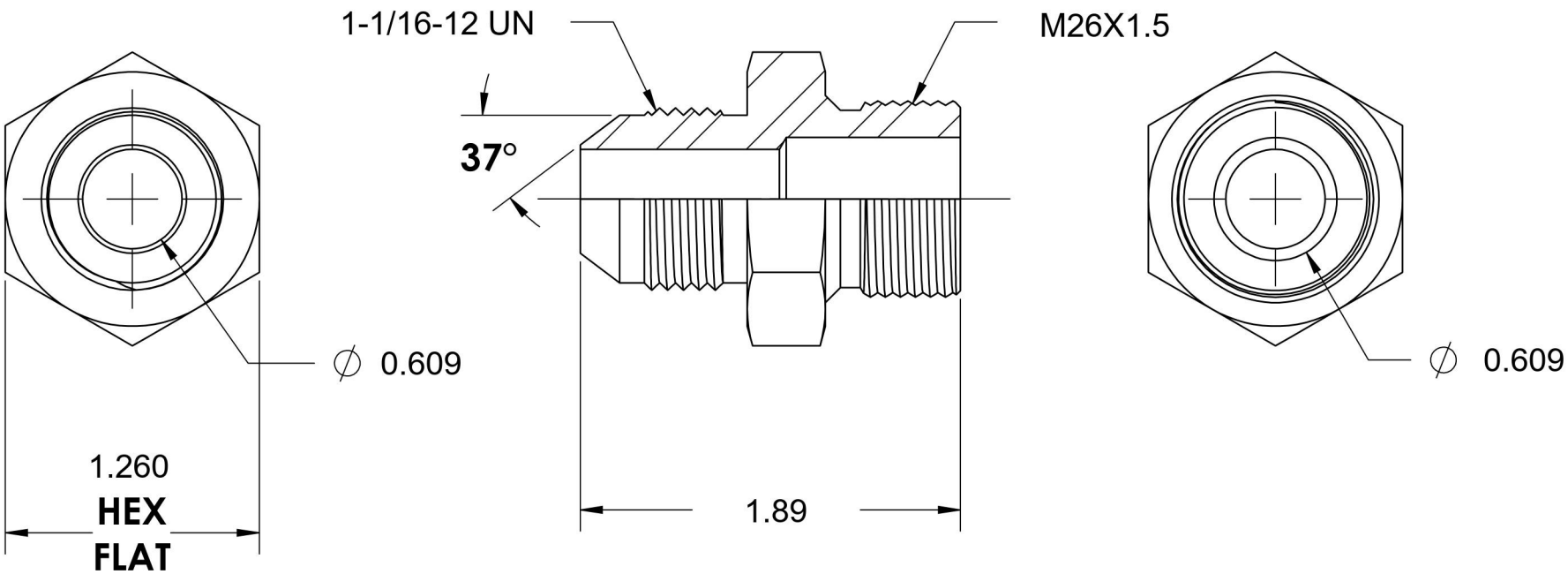

6701 Cochran Road
Solon, Ohio 44139
Phone: (440) 248-1880
Toll Free: 1-888-331-1523

Temperature Rating	Material	Industry Standards	Series
-425°F to 1200°F	316/316L Stainless Steel	SAE J514, ISO 9974	7005-SS
Pressure Rating	**Finish**		**Series Description**
5000 psi	Passivated		SAE J514 37° Flare Male Metric Port/Line Connector