2601-12-16-20-FG

Steel, SAE J514 SAE J514 37° Flare Male Branch Tee, 3/4" Male JIC x 1" Male JIC x 1-1/4" Male NPTF 30°

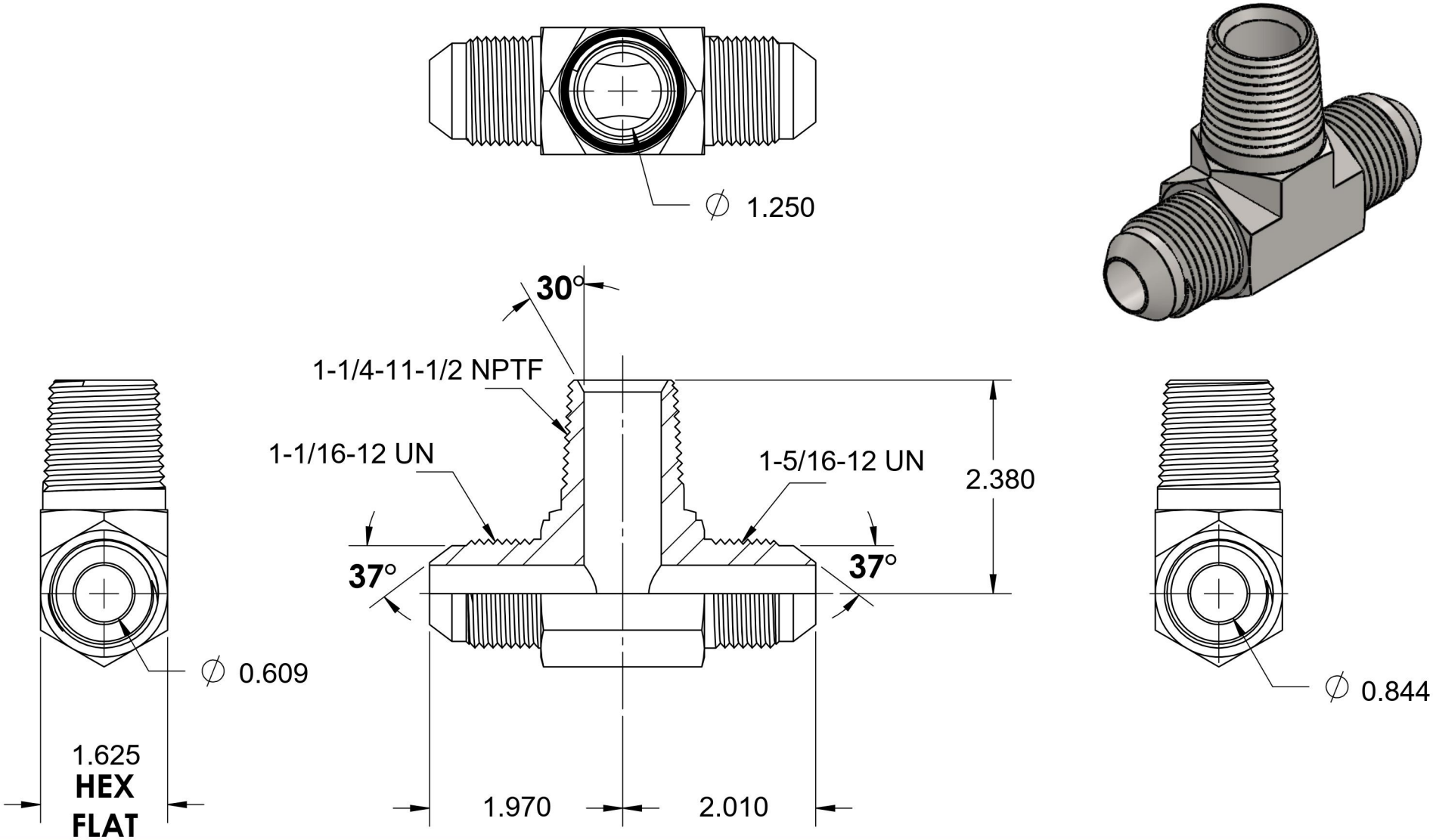

BRENNAN

6701 Cochran Road
Solon, Ohio 44139
Phone: (440) 248-1880
Toll Free: 1-888-331-1523

Temperature Rating	Material	Industry Standards	Series
-65°F to 500°F	C1045 Steel	SAE J514 , SAE J476	2601-FG
Pressure Rating	**Finish**		**Series Description**
2500 psi	Trivalent Zinc		SAE J514 37° Flare Male Branch Tee