6500-08-06-FG

Steel, SAE J514 37° Flare 90° Swivel Elbow, 1/2" Male JIC x 3/8" Female JIC Swivel

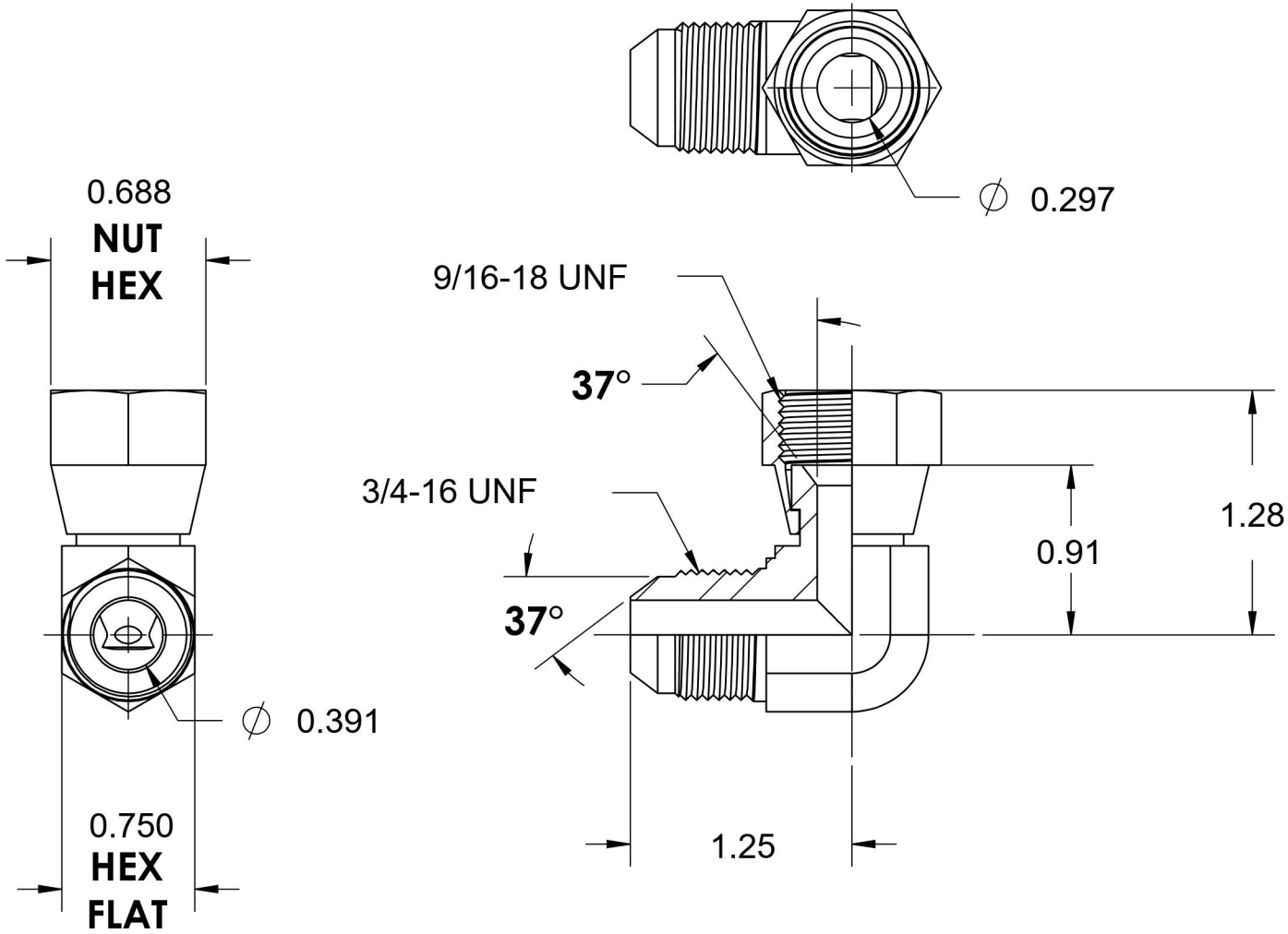

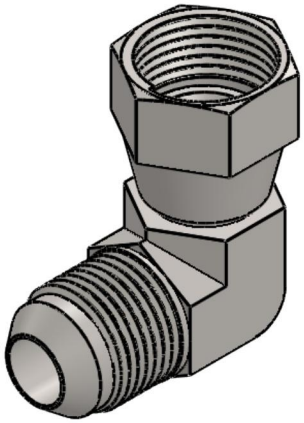

BRENNAN

6701 Cochran Road
Solon, Ohio 44139
Phone: (440) 248-1880
Toll Free: 1-888-331-1523

Temperature Rating	Material	Industry Standards	Series
-65°F to 500°F	C1045 Steel	SAE J514, ASTM B633	6500-FG
Pressure Rating	**Finish**		**Series Description**
6000 psi	Trivalent Zinc		SAE J514 37° Flare 90° Swivel Elbow