7005-16-S20-30-NBR

Steel, SAE J514 37° Flare/ISO 8434-1 Heavy Series Male Adapter, Nut and Bite Ring Assembled, 1" Male JIC x M30X2.0 DIN Tube

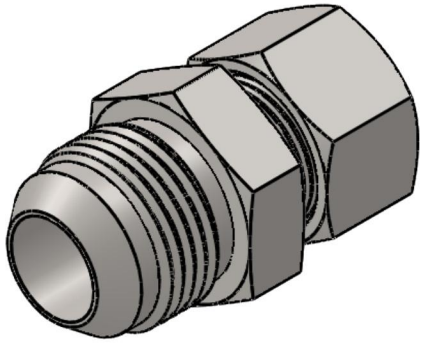

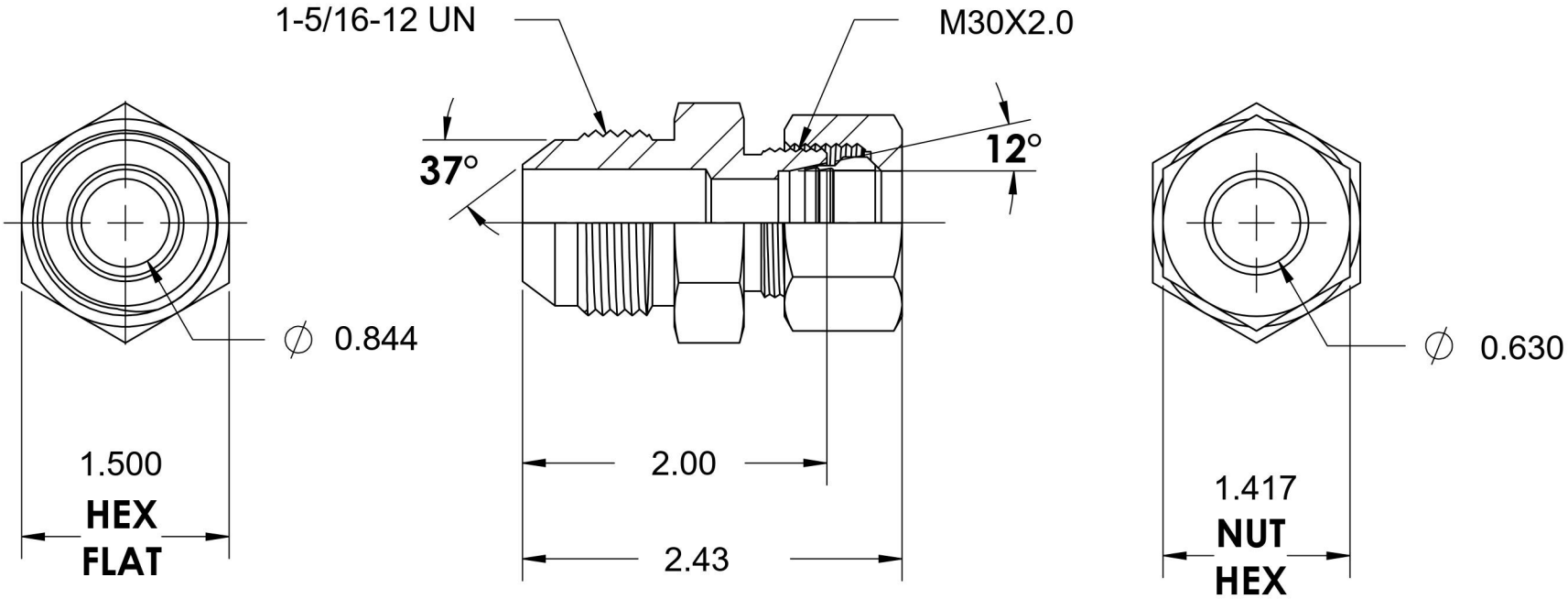

BRENNAN

6701 Cochran Road
Solon, Ohio 44139
Phone: (440) 248-1880
Toll Free: 1-888-331-1523

Temperature Rating	Material	Industry Standards	Series
-65°F to 500°F	C1045 / 12L14 Steel	SAE J514, ISO 8434-1	7005-DIN HEAVY-NBR
Pressure Rating	**Finish**	ASTM B633	**Series Description**
4000 psi	Trivalent Zinc		SAE J514 37° Flare/ISO 8434-1 Heavy Series Male Adapter Nut and Bite Ring Assembled