1804-10-10

Steel, SAE J514 37° Flare Code 62 Flange 90° Swept Elbow, 5/8" Male JIC x 5/8" Split Flange Head

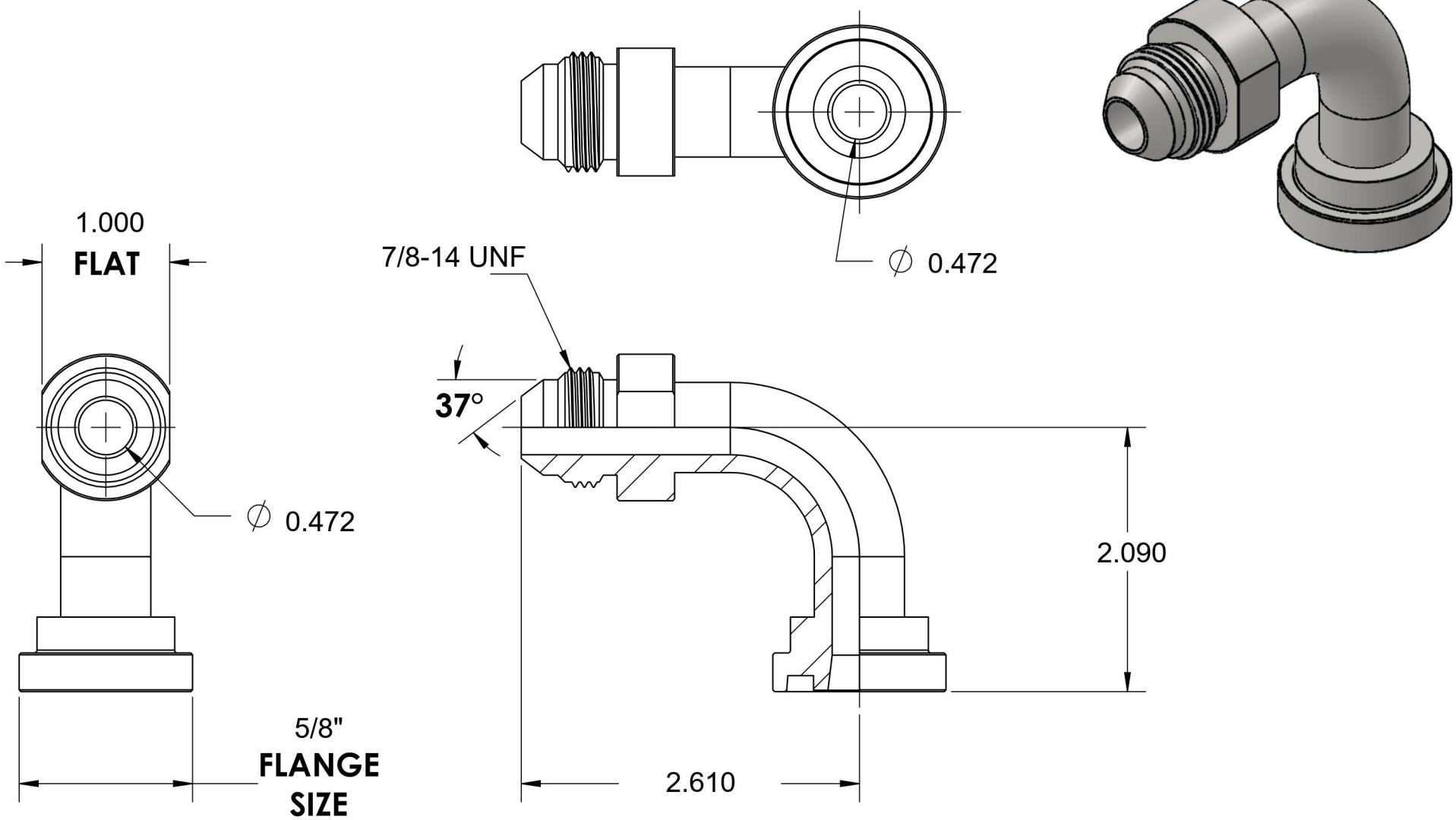

BRENNAN

6701 Cochran Road
Solon, Ohio 44139
Phone: (440) 248-1880
Toll Free: 1-888-331-1523

Temperature Rating	Material	Industry Standards	Series
-65°F to 500°F	S20C Steel	SAE J518 Code 62, SAE J514 ASTM B633	1804
Pressure Rating	**Finish**		**Series Description**
5000 psi	Trivalent Zinc		SAE J514 37° Flare Code 62 Flange 90° Swept Elbow