6402-08-10-O-SS

Stainless Steel, SAE J514 37° Flare Swivel Port Connector, 3/4-16 Male ORB x 5/8" Female JIC Swivel

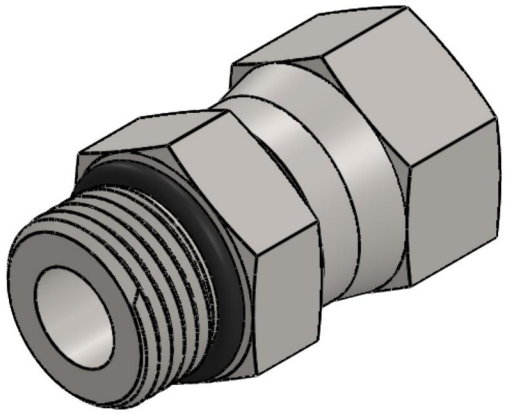

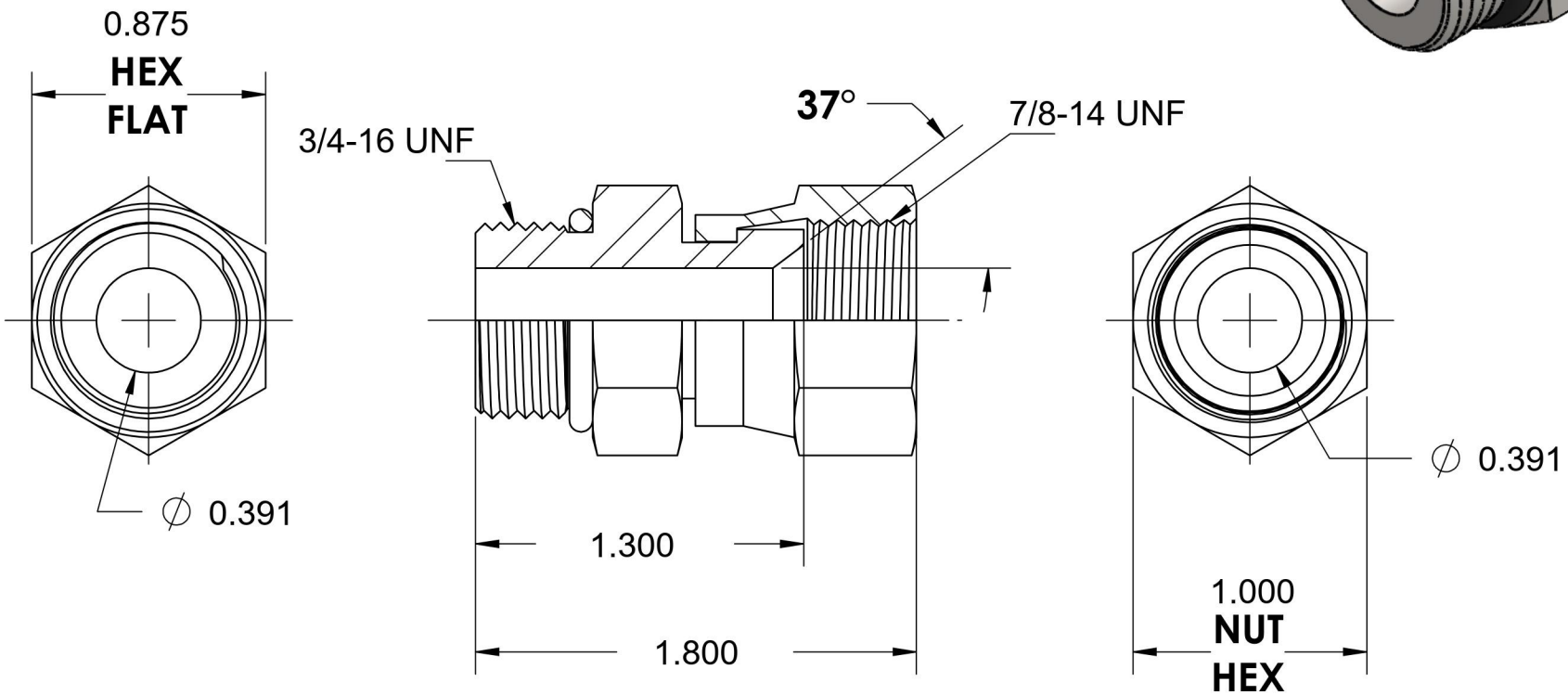

BRENNAN

6701 Cochran Road
Solon, Ohio 44139
Phone: (440) 248-1880
Toll Free: 1-888-331-1523

Temperature Rating	Material	Industry Standards	Series
-40°F to 250°F	316/316L Stainless Steel	SAE J514, SAE J1926-3	6402-O-SS
Pressure Rating	**Finish**		**Series Description**
6000 psi	Passivated		SAE J514 37° Flare Swivel Port Connector