# C2501-14-12-FG

## Steel, SAE J514 Flareless Tube 90° Male Elbow, 7/8" Flareless Bite Type x 3/4" Male NPTF 30°

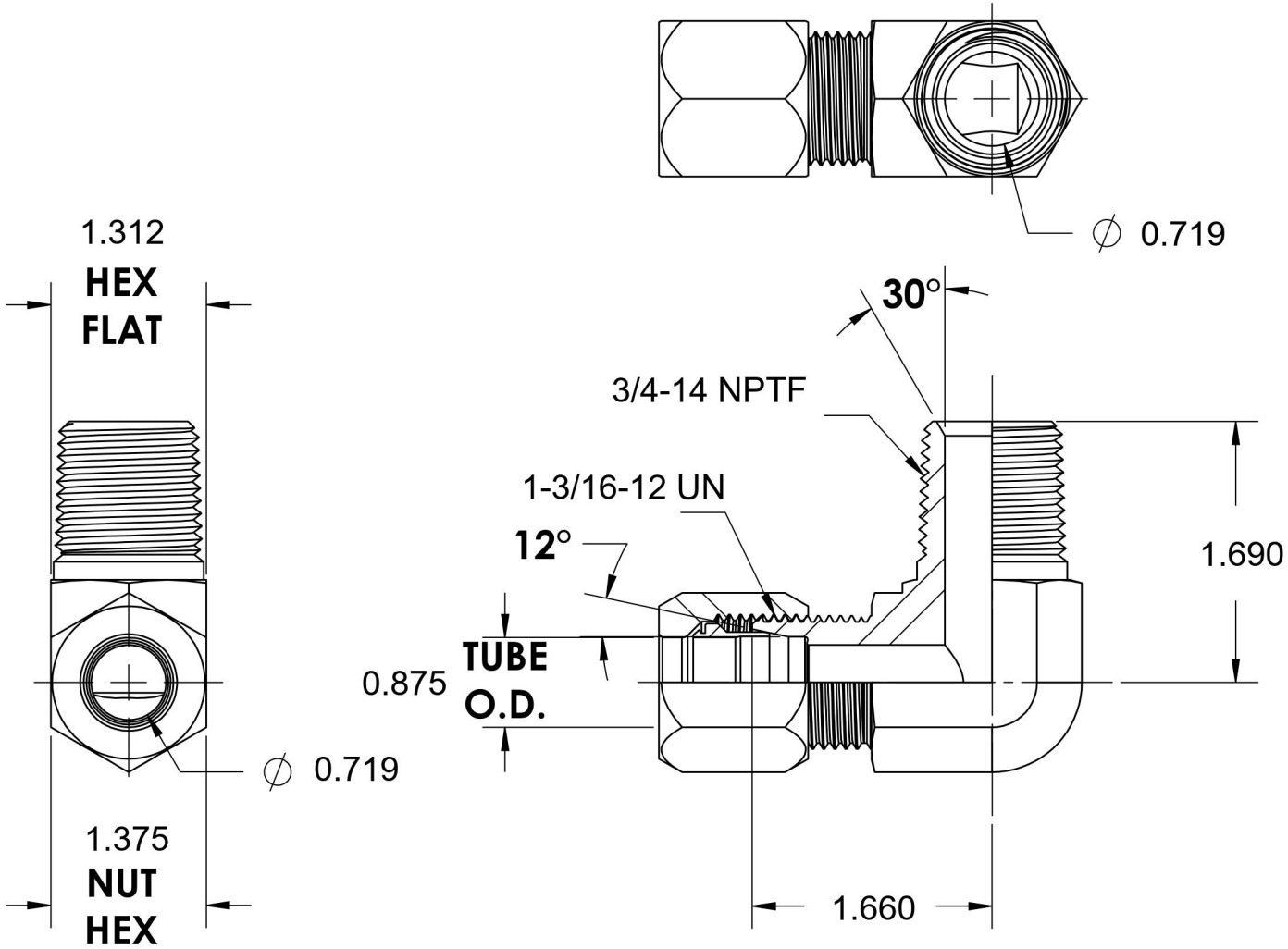


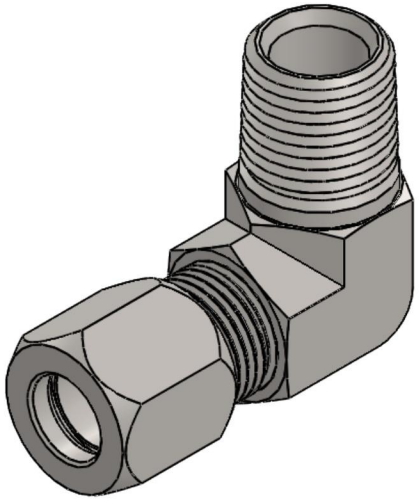


BRENNAN

6701 Cochran Road
Solon, Ohio 44139
Phone: (440) 248-1880
Toll Free: 1-888-331-1523


| Temperature Rating | Material | Industry Standards | Series |
|---|---|---|---|
| -65°F to 500°F | C1045 Steel | SAE J514, SAE J476<br>ASTM B633 | C2501-FG |
| **Pressure Rating** | **Finish** | | **Series Description** |
| 3000 psi | Trivalent Zinc | | SAE J514 Flareless Tube 90° Male Elbow |