4501-10-06-SS

Stainless Steel, SAE J1231 Hose Bead 90° Male Elbow, 5/8" Beaded Hose Barb x 3/8" Male NPTF 30°

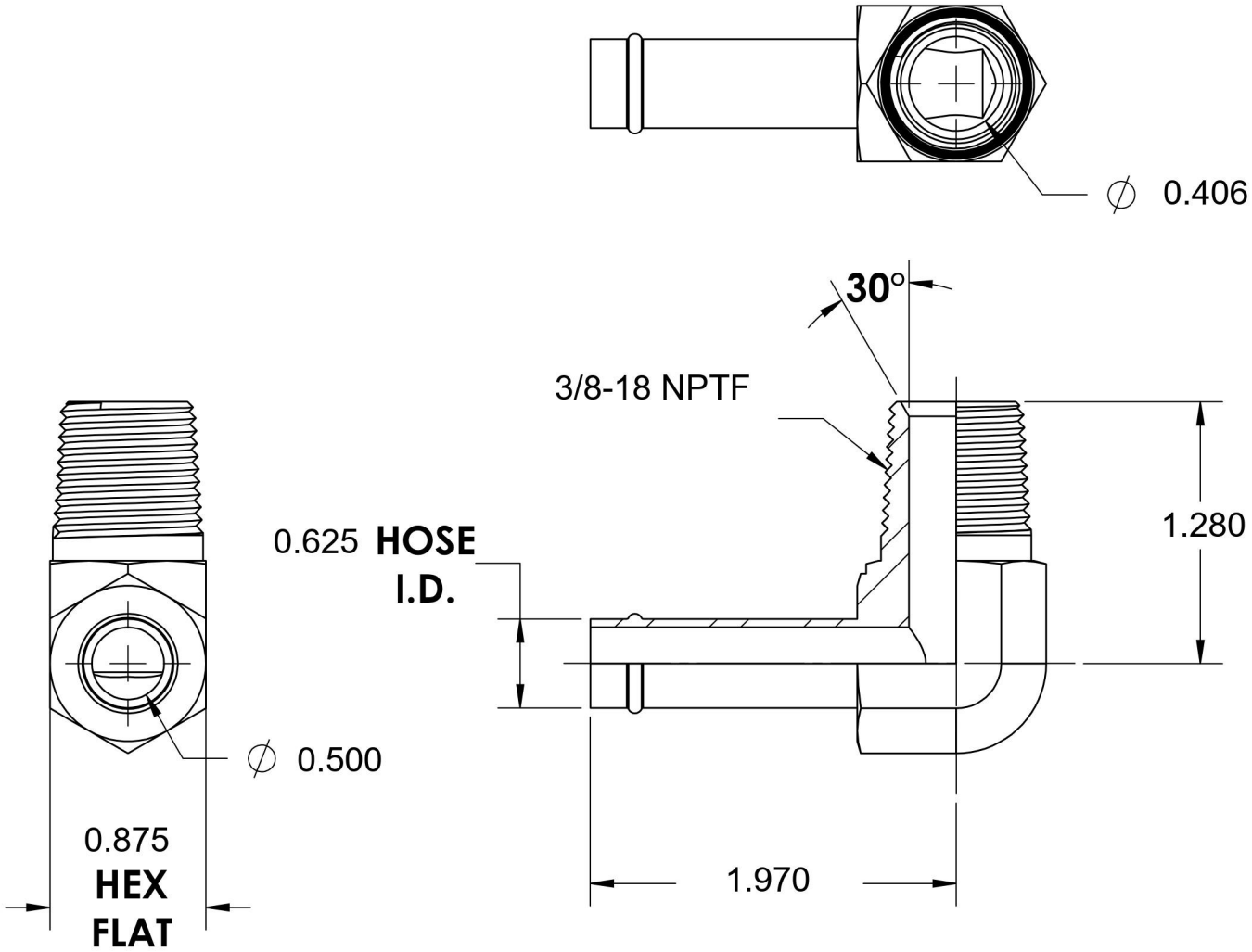

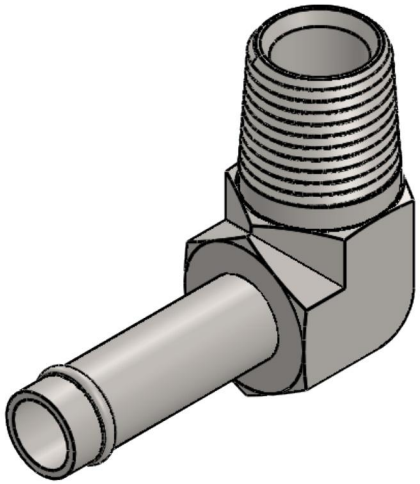

BRENNAN

6701 Cochran Road
Solon, Ohio 44139
Phone: (440) 248-1880
Toll Free: 1-888-331-1523

Temperature Rating	Material	Industry Standards	Series
-425°F to 1200°F	316/316L Stainless Steel	SAE J1231, SAE J476	4501-SS
Pressure Rating	**Finish**		**Series Description**
150 psi	Passivated		SAE J1231 Hose Bead 90° Male Elbow