7007-06-L10-16-SS

Stainless Steel, SAE J514 37° Flare DIN (L) Swivel Adapter, 3/8" Male JIC x M16X1.5 Female DKO Swivel

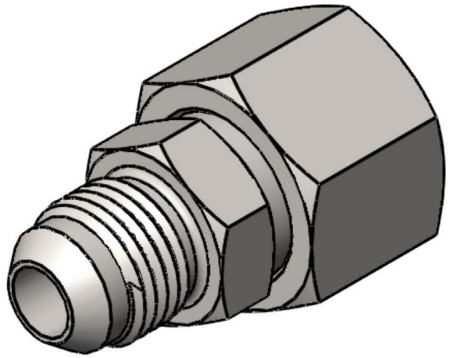

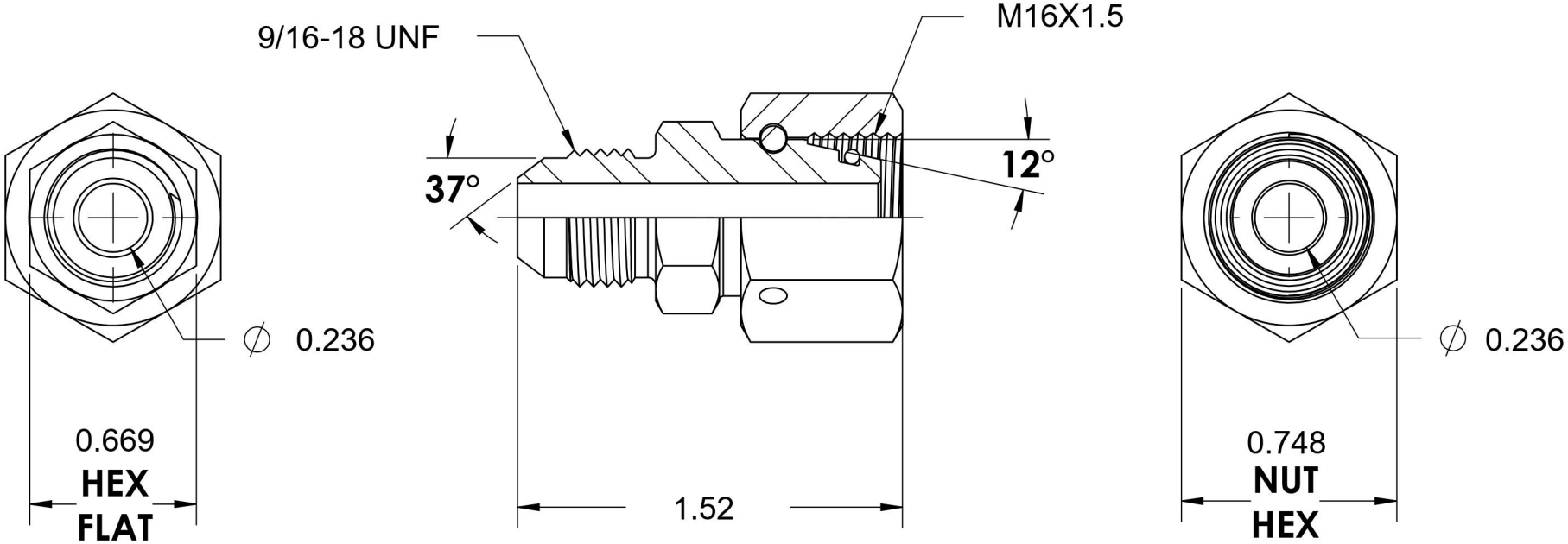

6701 Cochran Road
Solon, Ohio 44139
Phone: (440) 248-1880
Toll Free: 1-888-331-1523

Temperature Rating	Material	Industry Standards	Series
-40°F to 250°F	316/316L Stainless Steel	SAE J514, ISO 8434-1	7007-DIN LIGHT-SS
Pressure Rating	**Finish**	DIN 2353	**Series Description**
4500 psi	Passivated		SAE J514 37° Flare DIN (L) Swivel Adapter