6804-06-08-08-NWO-FG

Steel, SAE J514 37° Flare Adjustable Port Run Tee, 3/8" Male JIC x 3/4-16 Male Adjustable ORB x 1/2" Male JIC

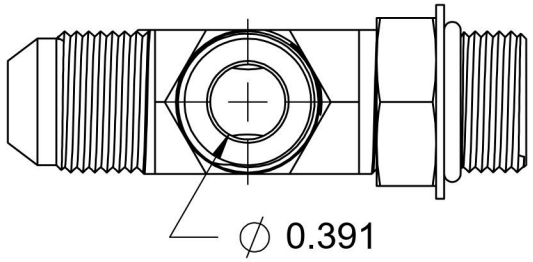

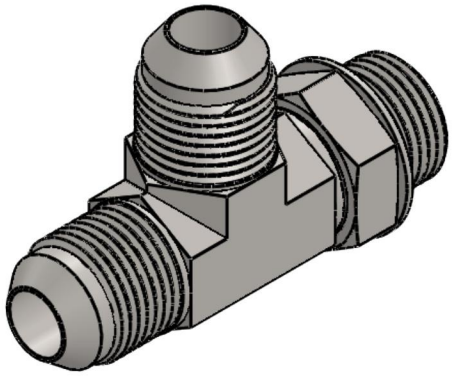

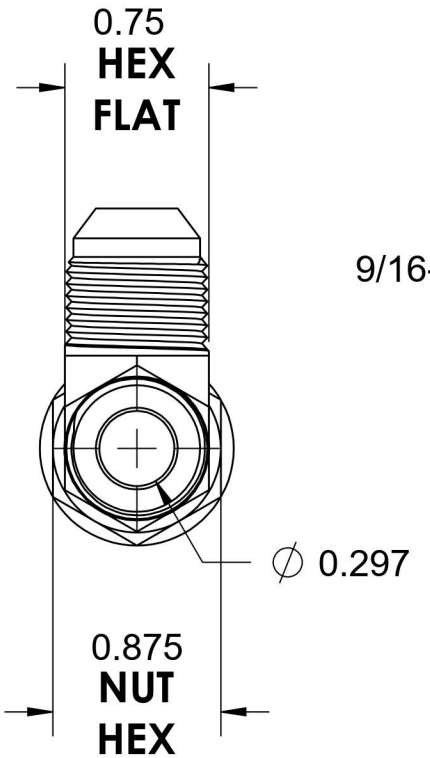

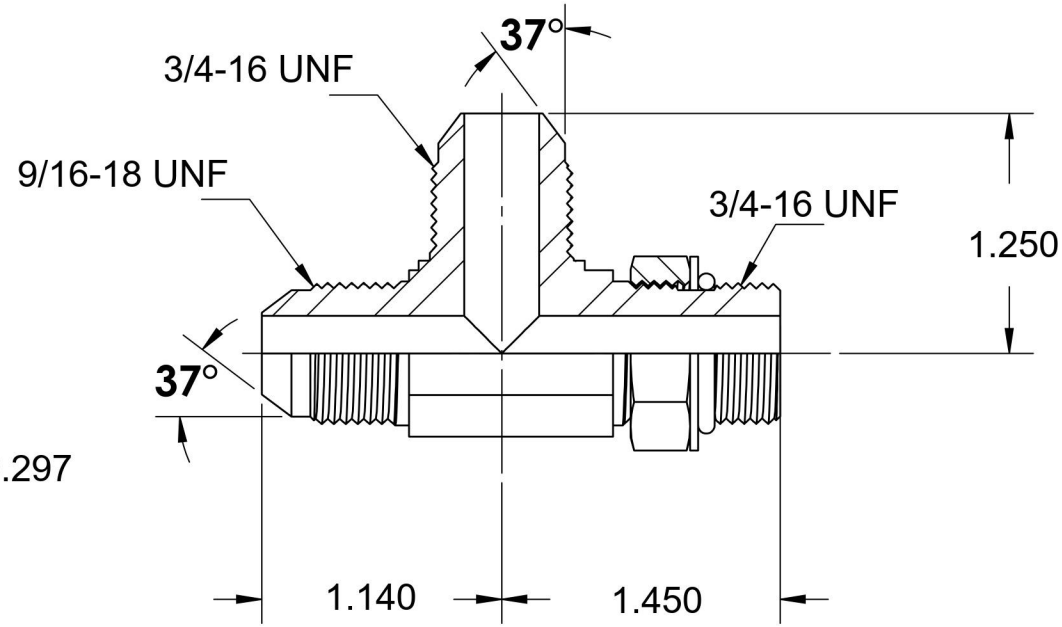

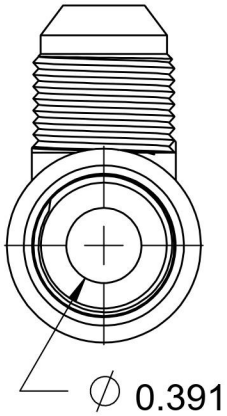

BRENNAN

6701 Cochran Road
Solon, Ohio 44139
Phone: (440) 248-1880
Toll Free: 1-888-331-1523

Temperature Rating	Material	Industry Standards	Series
-40°F to 250°F	C1045 Steel	SAE J514, SAE J1926-3 SAE J515, ASTM B633	6804-NWO-FG
Pressure Rating	**Finish**		**Series Description**
6000 psi	Trivalent Zinc		SAE J514 37° Flare Adjustable Port Run Tee