2501-L-12-16-SS

Stainless Steel, SAE J514 37° Flare 90° Long Male Elbow, 3/4" Male JIC x 1" Male NPTF 30°

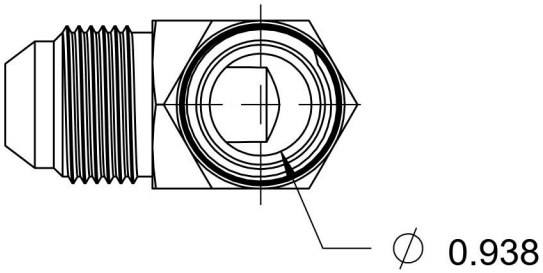

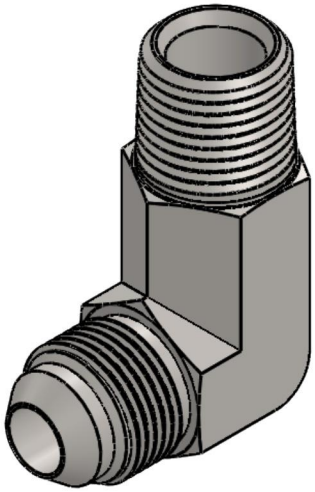

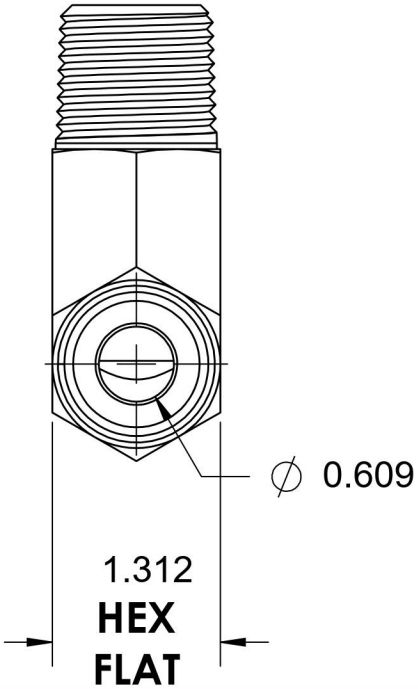

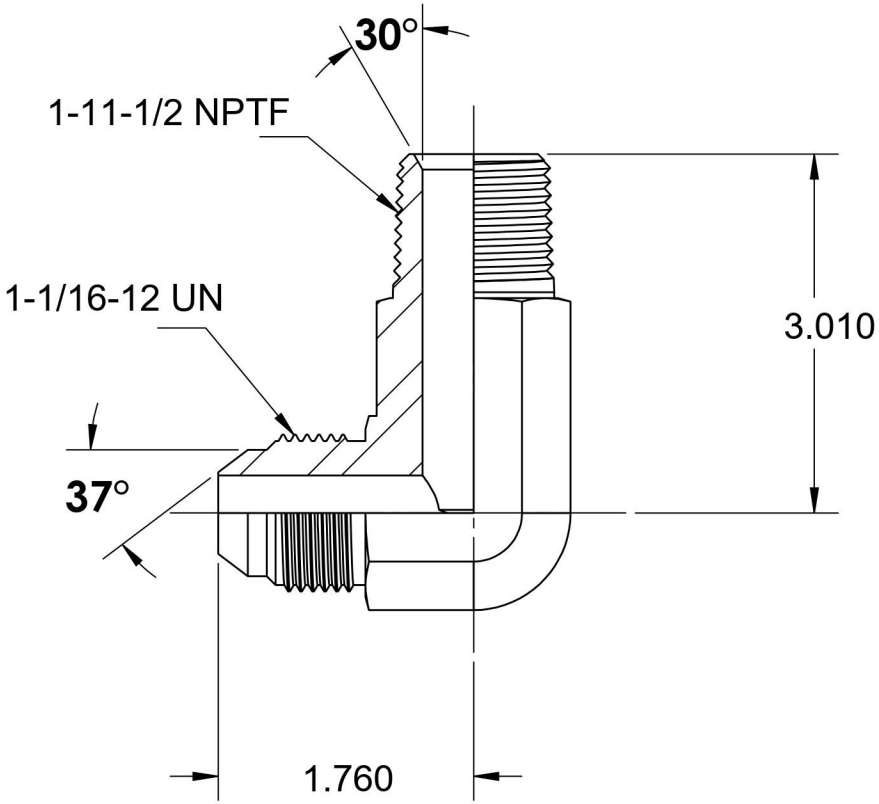

BRENNAN

6701 Cochran Road
Solon, Ohio 44139
Phone: (440) 248-1880
Toll Free: 1-888-331-1523

Temperature Rating	Material	Industry Standards	Series
-425°F to 1200°F	316/316L Stainless	SAE J514 , SAE J476	2501-L-FG
Pressure Rating	**Finish**		**Series Description**
3000psi	Passivation		SAE J514 37° Flare 90° Long Male Elbow