FS6804-08-12-04-NWO-FG

Steel, SAE J1453 O-Ring Face Seal Adjustable Port Run Tee, 1/2" Male ORFS x 1-1/16-12 Male Adjustable ORB x 1/4" Male ORFS

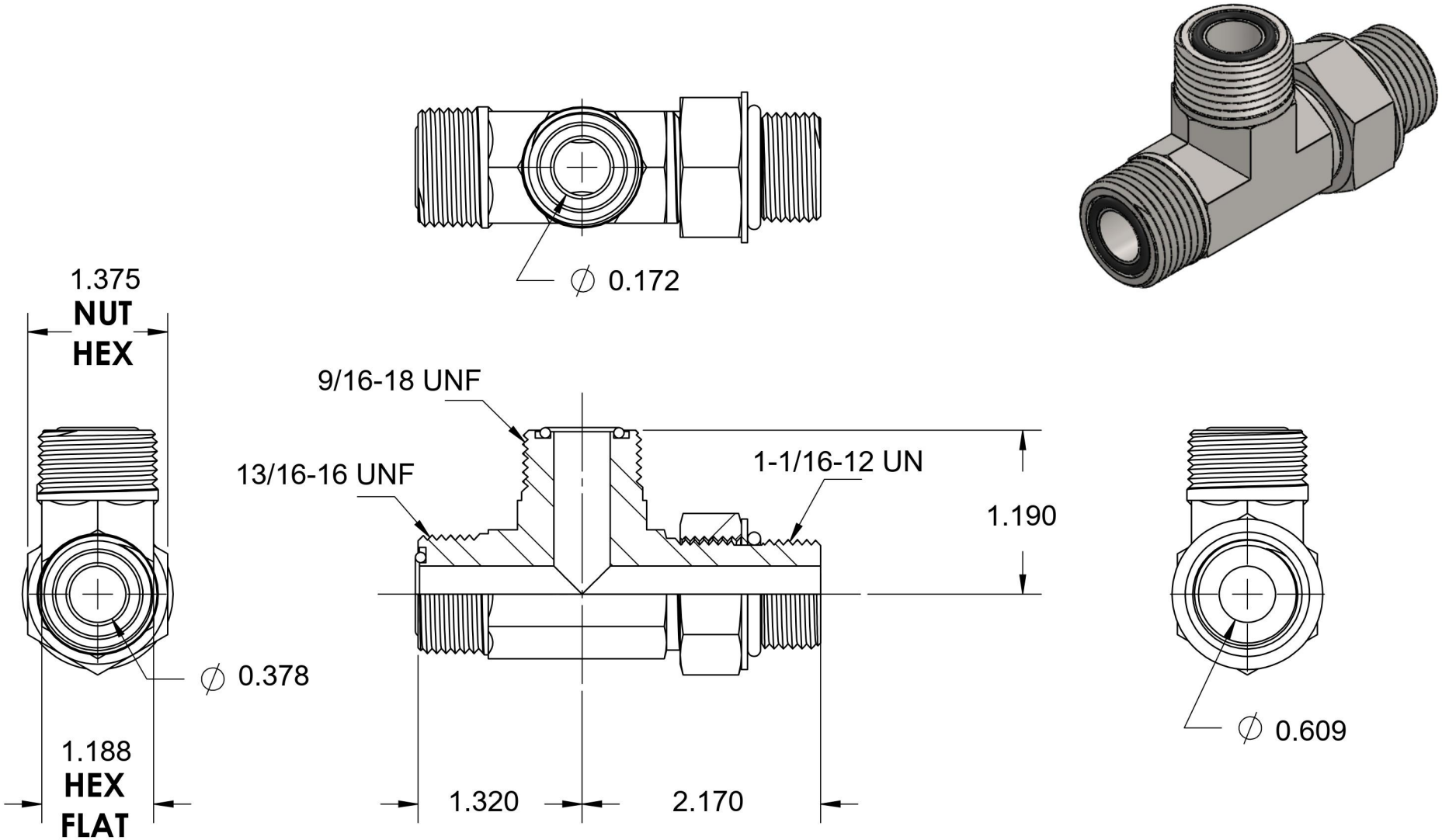

BRENNAN

6701 Cochran Road
Solon, Ohio 44139
Phone: (440) 248-1880
Toll Free: 1-888-331-1523

Temperature Rating	Material	Industry Standards	Series
-40°F to 250°F	C1045 Steel	SAE J1453, SAE J1926-2 SAE J515, ASTM B633	FS6804-NWO-FG
Pressure Rating	**Finish**		**Series Description**
6000 psi	Trivalent Zinc		SAE J1453 O-Ring Face Seal Adjustable Port Run Tee