1704-32-40-FG

Steel, SAE J514 37° Flare 90° Code 61 Flange Forged Elbow, 2" Male JIC x 2-1/2" Split Flange Head

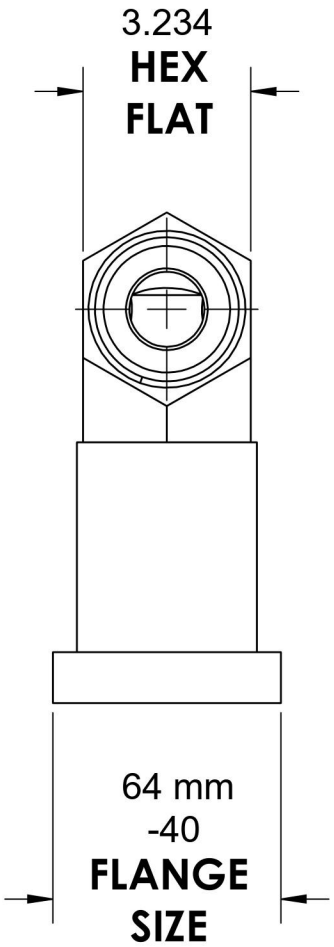

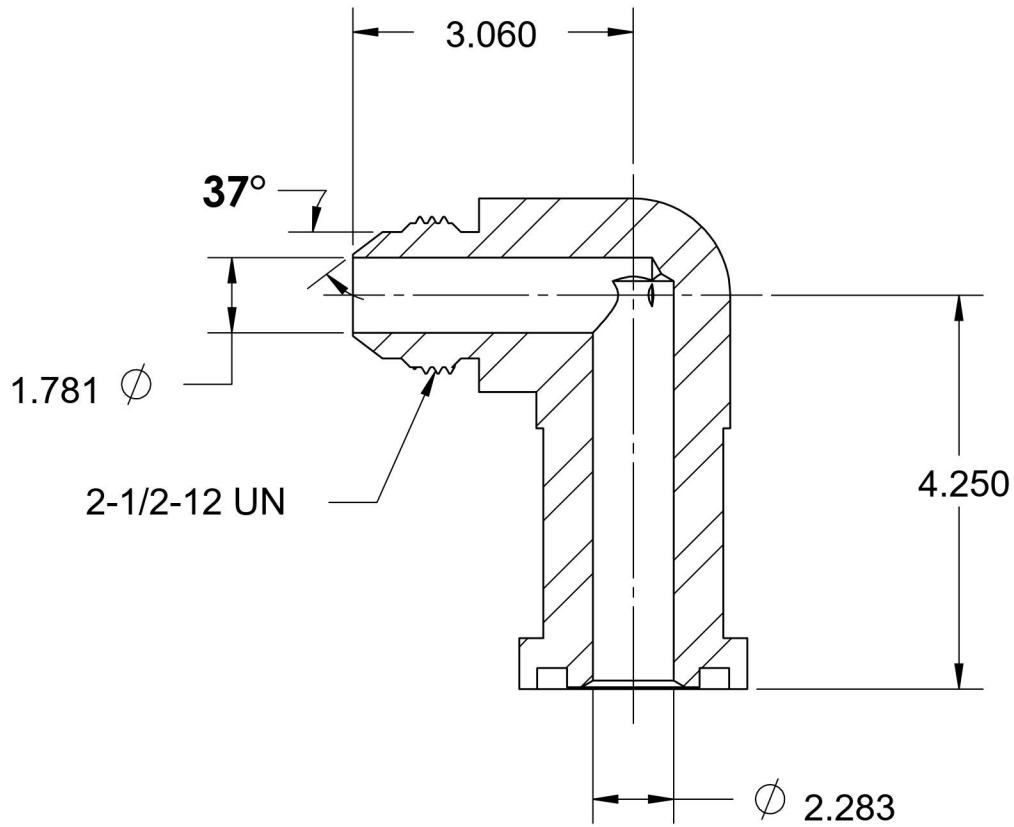

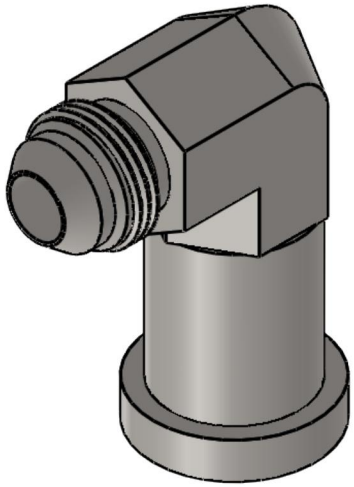

BRENNAN

6701 Cochran Road
Solon, Ohio 44139
Phone: (440) 248-1880
Toll Free: 1-888-331-1523

Temperature Rating	Material	Industry Standards	Series
-65°F to 500°F	C1045 Steel	SAE J518 Code 61 SAE J514, ASTM B633	1704-FG
Pressure Rating	**Finish**		**Series Description**
Not Available	Trivalent Zinc		SAE J514 37° Flare 90° Code 61 Flange Forged Elbow