FS6400-L-24-24-O

Steel, SAE J1453 O-Ring Face Seal Long Port Connector, 1-1/2" Male ORFS x 1-7/8-12 Male ORB

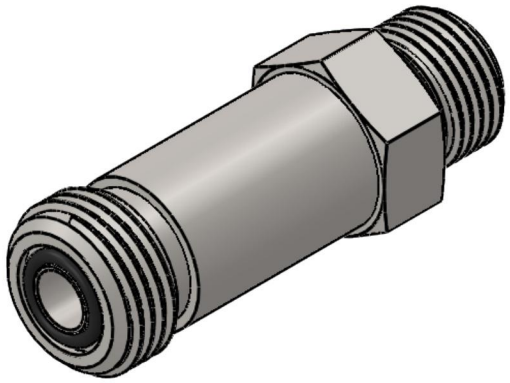

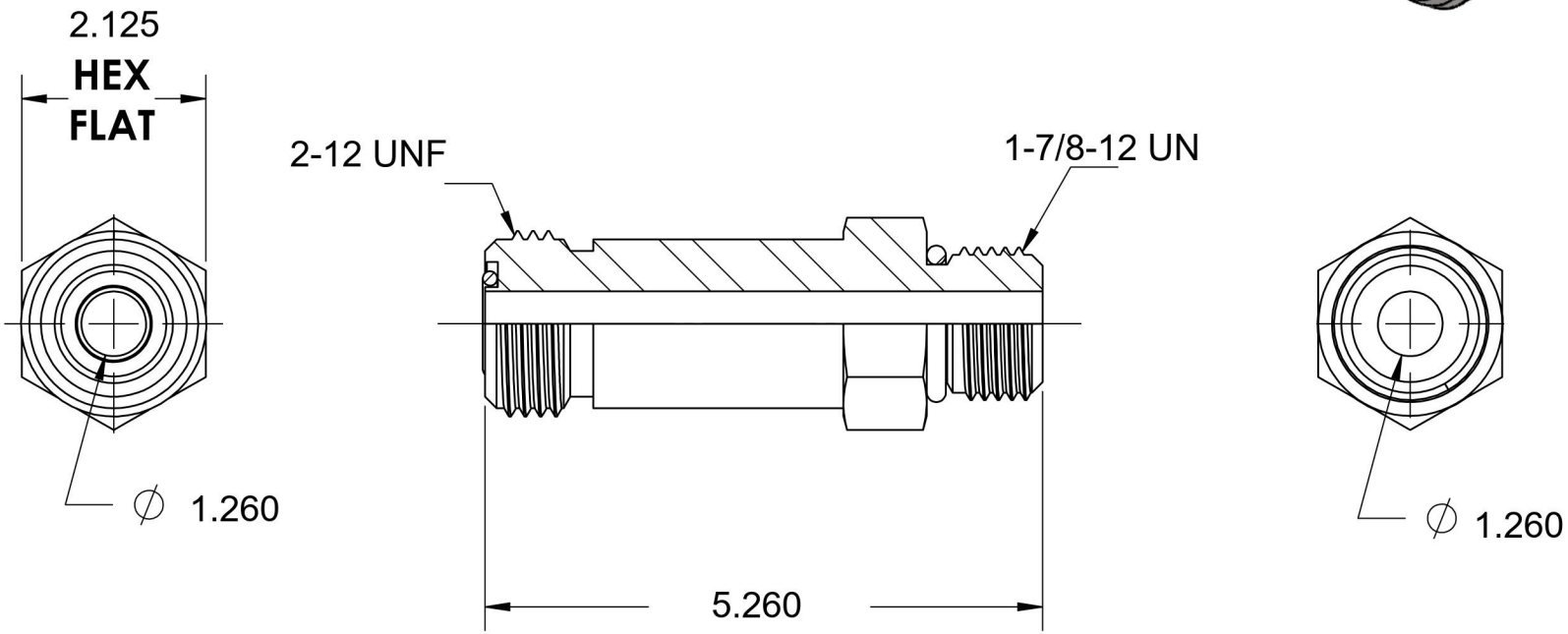

BRENNAN

6701 Cochran Road
Solon, Ohio 44139
Phone: (440) 248-1880
Toll Free: 1-888-331-1523

Temperature Rating	Material	Industry Standards	Series
-40°F to 250°F	C1045/12L14 Steel	SAE J1453, SAE J1926-2 SAE J515, ASTM B633	FS6400-L-O
Pressure Rating	**Finish**		**Series Description**
5000 psi	Trivalent Zinc		SAE J1453 O-Ring Face Seal Long Port Connector