FS6809-10-10-NWO-FG

Steel, SAE J1453 O-Ring Face Seal Swivel 90° Adjustable Port Elbow, 5/8" Female ORFS Swivel x 7/8-14 Male Adjustable ORB

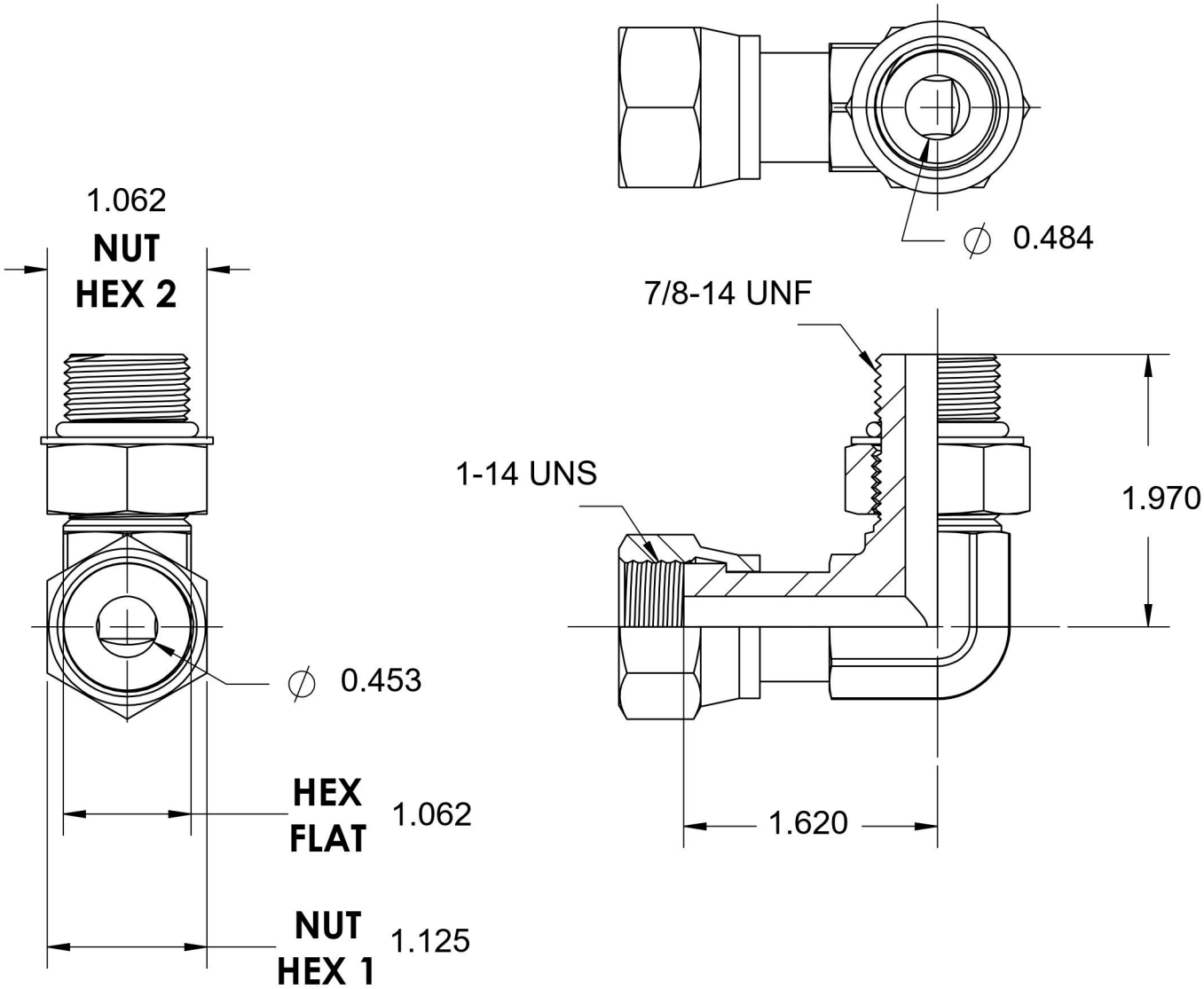

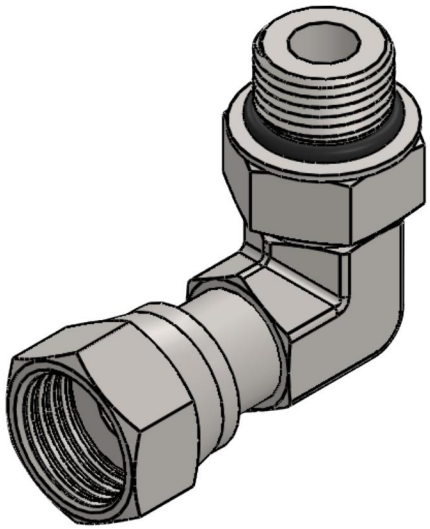

BRENNAN

6701 Cochran Road
Solon, Ohio 44139
Phone: (440) 248-1880
Toll Free: 1-888-331-1523

Temperature Rating	Material	Industry Standards	Series
-40°F to 250°F	C1045 Steel	SAE J1453, SAE J1926 ASTM B633	FS6809-NWO-FG
Pressure Rating	**Finish**		**Series Description**
6000psi	Trivalent Zinc		SAE J1453 O-Ring Face Seal Swivel 90° Adjustable Port Elbow