D2408-S10-SS-X

Stainless Steel, DIN 2353 Plug, Heavy 10mm Tube OD, Body Only

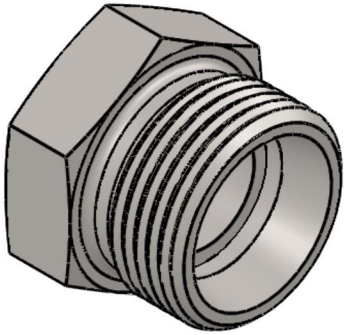

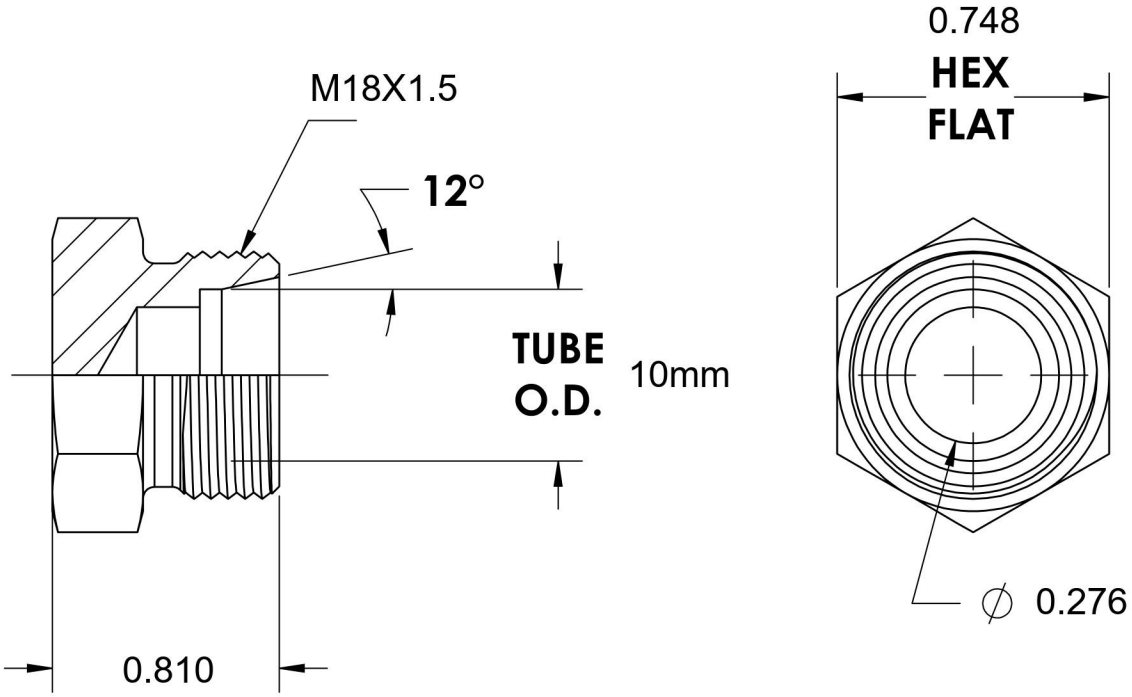

BRENNAN

6701 Cochran Road
Solon, Ohio 44139
Phone: (440) 248-1880
Toll Free: 1-888-331-1523

Temperature Rating	Material	Industry Standards	Series
-425°F to 1200°F	316Ti Stainless Steel	DIN 2353, ISO 8434-1	D2408-SS-X
Pressure Rating	**Finish**		**Series Description**
11603 psi	Passivated		DIN 2353 Flareless Tube Plug, Body Only