7005-06-20

Steel, SAE J514 37° Flare Male Metric Port/Line Connector, 3/8" Male JIC x M20X1.5 Male Metric 60° Line/Port

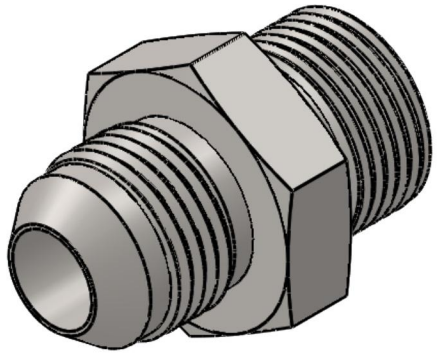

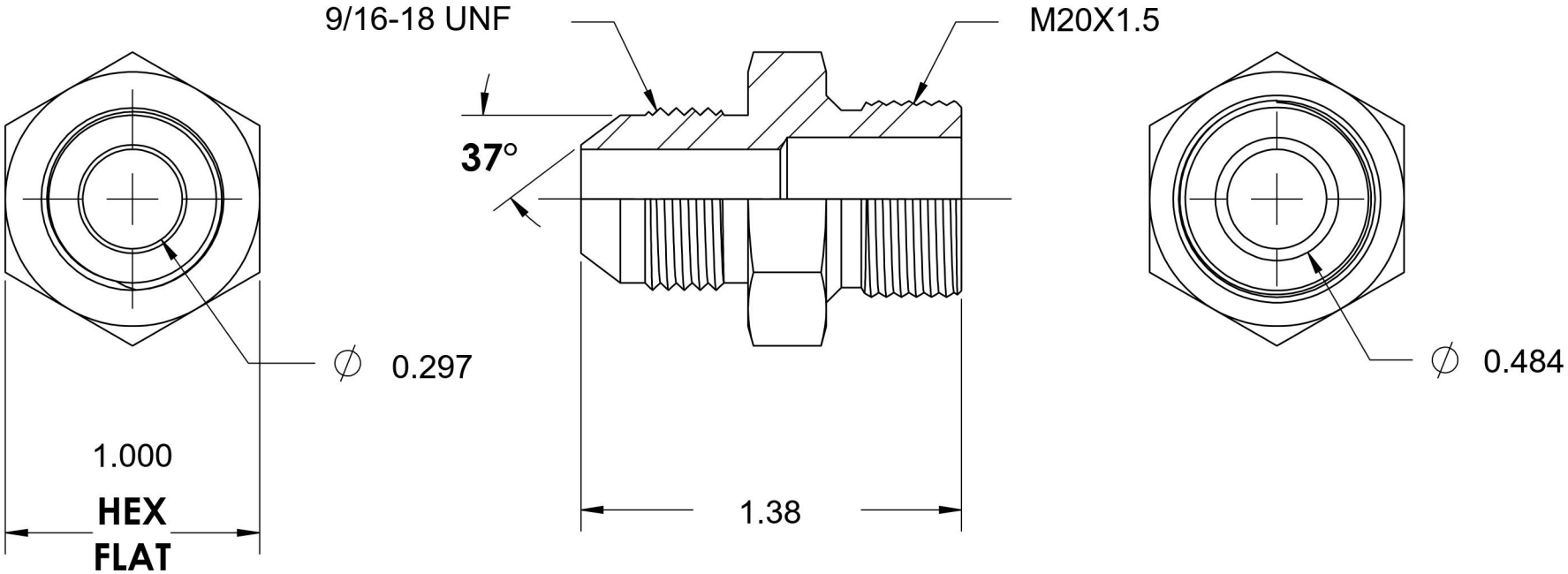

BRENNAN

6701 Cochran Road
Solon, Ohio 44139
Phone: (440) 248-1880
Toll Free: 1-888-331-1523

Temperature Rating	Material	Industry Standards	Series
-65°F to 500°F	C1045/12L14 Steel	SAE J514, ISO 9974	7005
Pressure Rating	**Finish**	ASTM B633	**Series Description**
6000 psi	Trivalent Zinc		SAE J514 37° Flare Male Metric Port/Line Connector