C2403-04-04

Steel, SAE J514 Flareless Tube Union, 1/4" Flareless Bite Type x 1/4" Flareless Bite Type

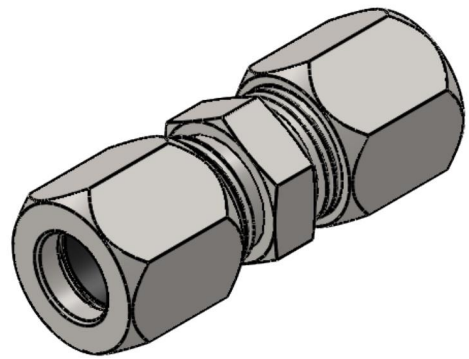

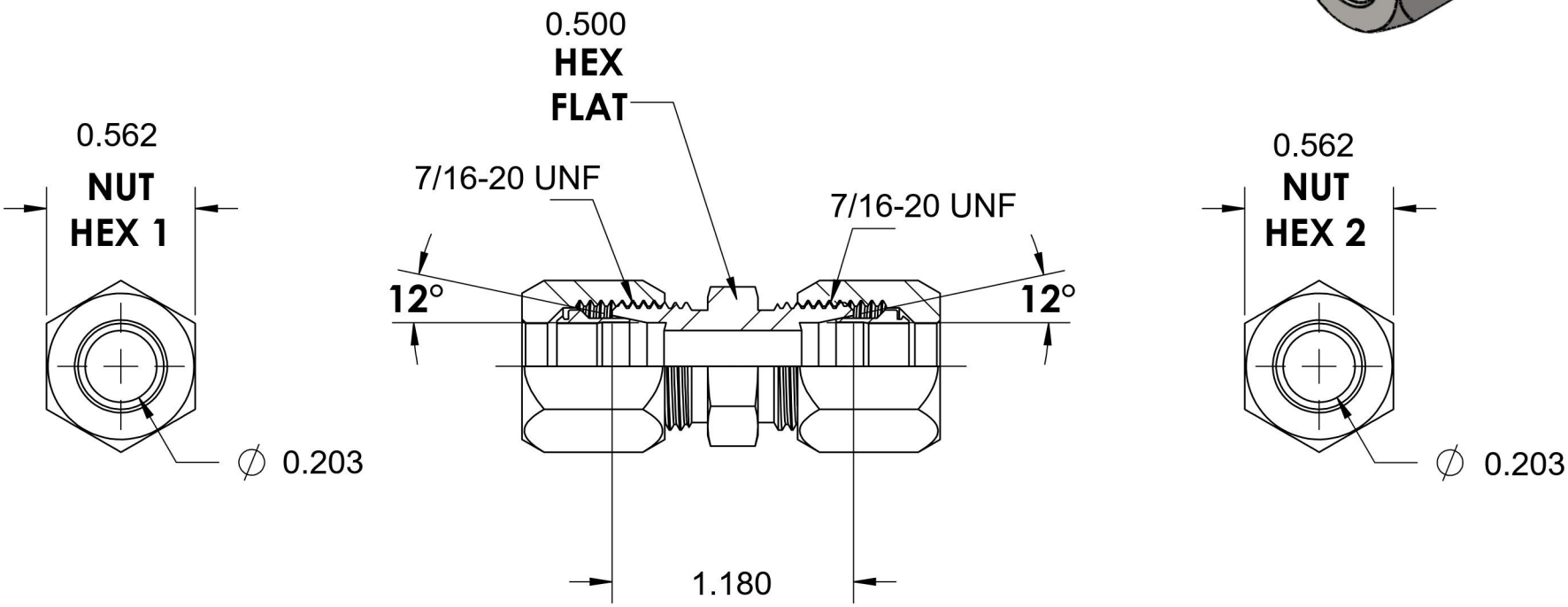

6701 Cochran Road
Solon, Ohio 44139
Phone: (440) 248-1880
Toll Free: 1-888-331-1523

Temperature Rating	Material	Industry Standards	Series
-65°F to 500°F	C1045/12L14 Steel	SAE J514, ASTM B633	C2403
Pressure Rating	**Finish**		**Series Description**
6000 psi	Trivalent Zinc		SAE J514 Flareless Tube Union