D0319-15

Steel, DIN 2353 Double Bite Cutting Ring, 15mm Tube OD

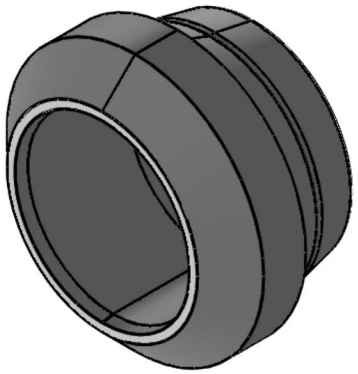

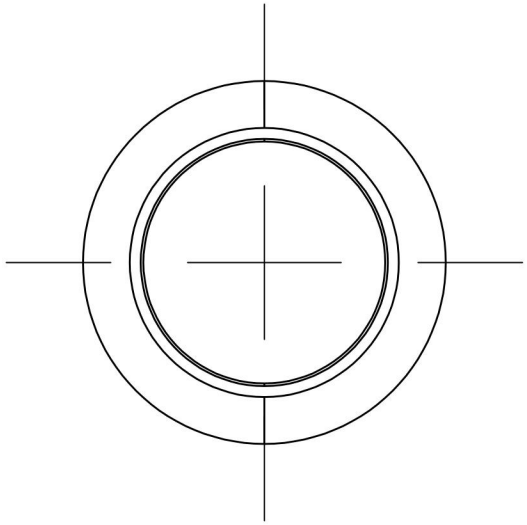

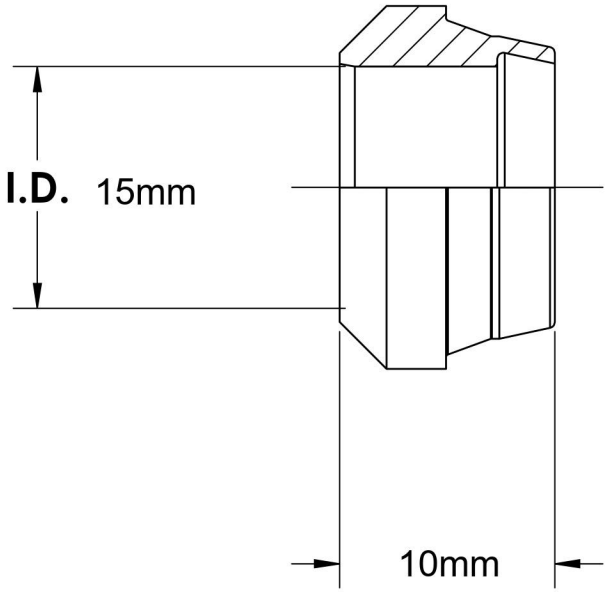

6701 Cochran Road
Solon, Ohio 44139
Phone: (440) 248-1880
Toll Free: 1-888-331-1523

Temperature Rating	Material	Industry Standards	Series
-65°F to 500°F	Carbon Steel	DIN 2353, ISO 8434-1	D0319
Pressure Rating	**Finish**		**Series Description**
5802psi	Zinc Nickel		DIN 2353 Flareless Double Bite Tube Sleeve