2706-32-32

Stainless Steel, SAE J514 Flared Tube Male Bulkhead, 2" Male NPTF 30° x 2" Male JIC

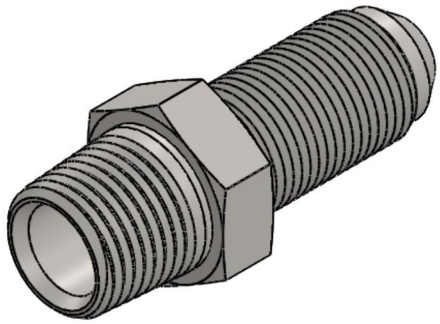

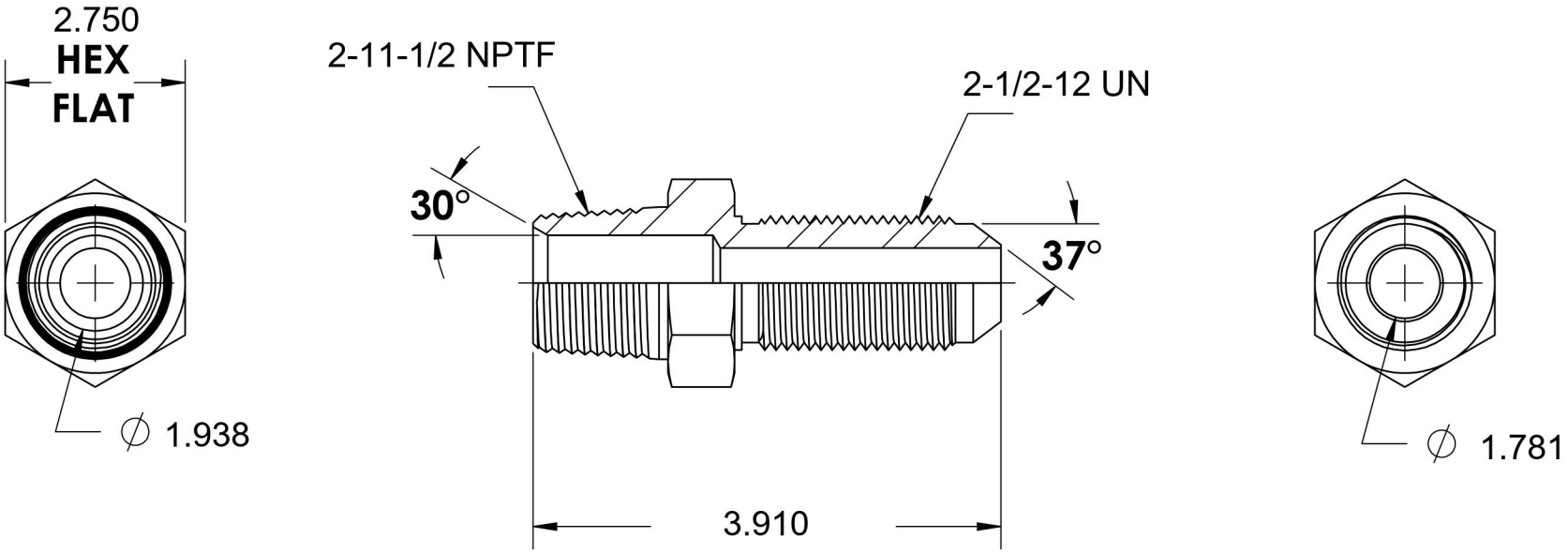

BRENNAN

6701 Cochran Road
Solon, Ohio 44139
Phone: (440) 248-1880
Toll Free: 1-888-331-1523

Temperature Rating	Material	Industry Standards	Series
-65°F to 500°F	C1045/12L14 Steel	SAE J514 , SAE J476	2706
Pressure Rating	**Finish**		**Series Description**
2000 psi	Trivalent Zinc		SAE J514 Flared Tube Male Bulkhead