# 0304-C-20

## Steel, SAE J514 37° Flare Tube Cap, 1-1/4" Female JIC

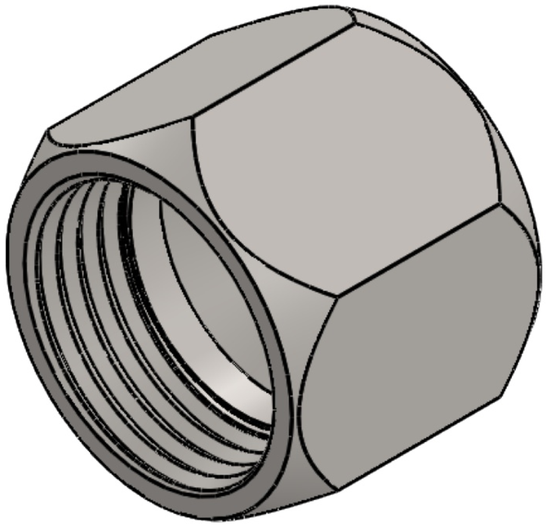

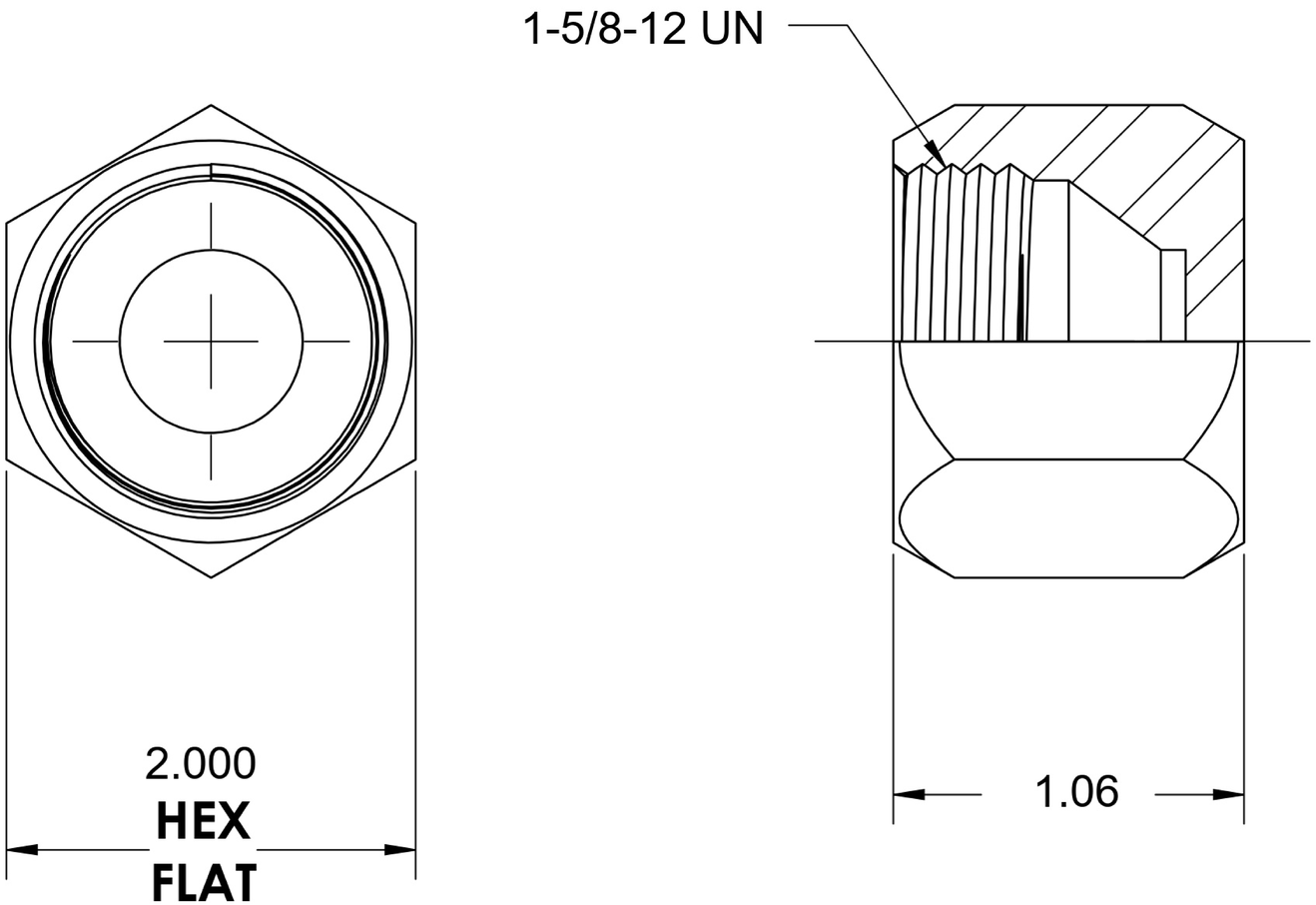



BRENNAN

6701 Cochran Road
Solon, Ohio 44139
Phone: (440) 248-1880
Toll Free: 1-888-331-1523


| Temperature Rating | Material | Industry Standards | Series |
|---|---|---|---|
| -65°F to 500°F | C1045 Steel | SAE J514, ASTM B633 | 0304-C |
| **Pressure Rating** | **Finish** | | **Series Description** |
| 4000 psi | Trivalent Zinc | | SAE J514 37° Flare Tube Cap |