6602-06-06-06-SS

Stainless Steel, SAE J514 37° Flare Swivel Run Tee, 3/8" Male JIC x 3/8" Female JIC Swivel x 3/8" Male JIC

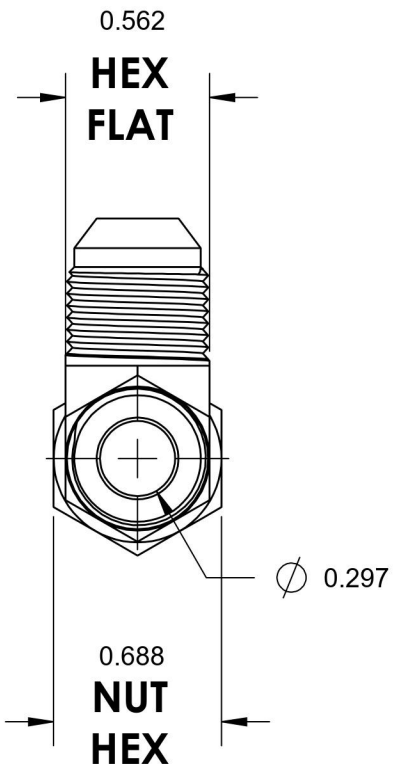

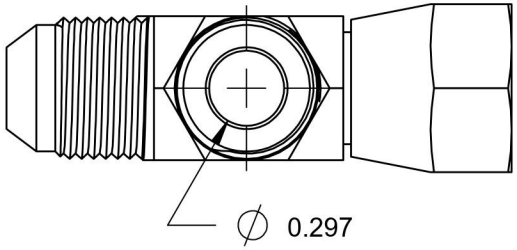

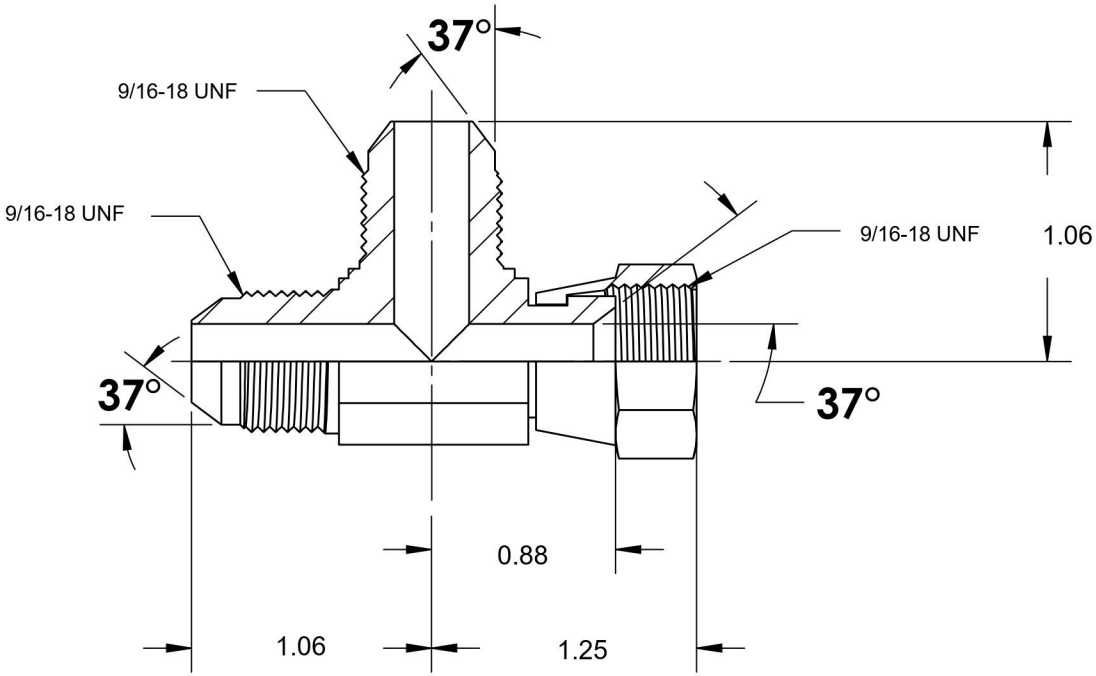

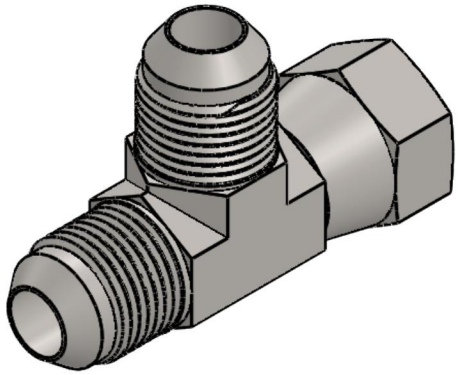

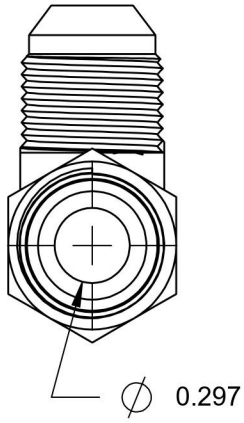

BRENNAN

6701 Cochran Road
Solon, Ohio 44139
Phone: (440) 248-1880
Toll Free: 1-888-331-1523

Temperature Rating	Material	Industry Standards	Series
-425°F to 1200°F	316/316L Stainless Steel	SAE J514	6602-SS
Pressure Rating	**Finish**		**Series Description**
6000 psi	Passivated		SAE J514 37° Flare Swivel Run Tee