C6400-08-08-O-SS

Stainless Steel, SAE J514 Flareless Tube Port Connector, 1/2" Flareless Bite Type x 3/4-16 Male ORB

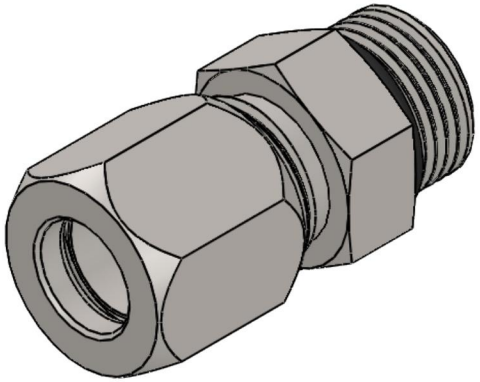

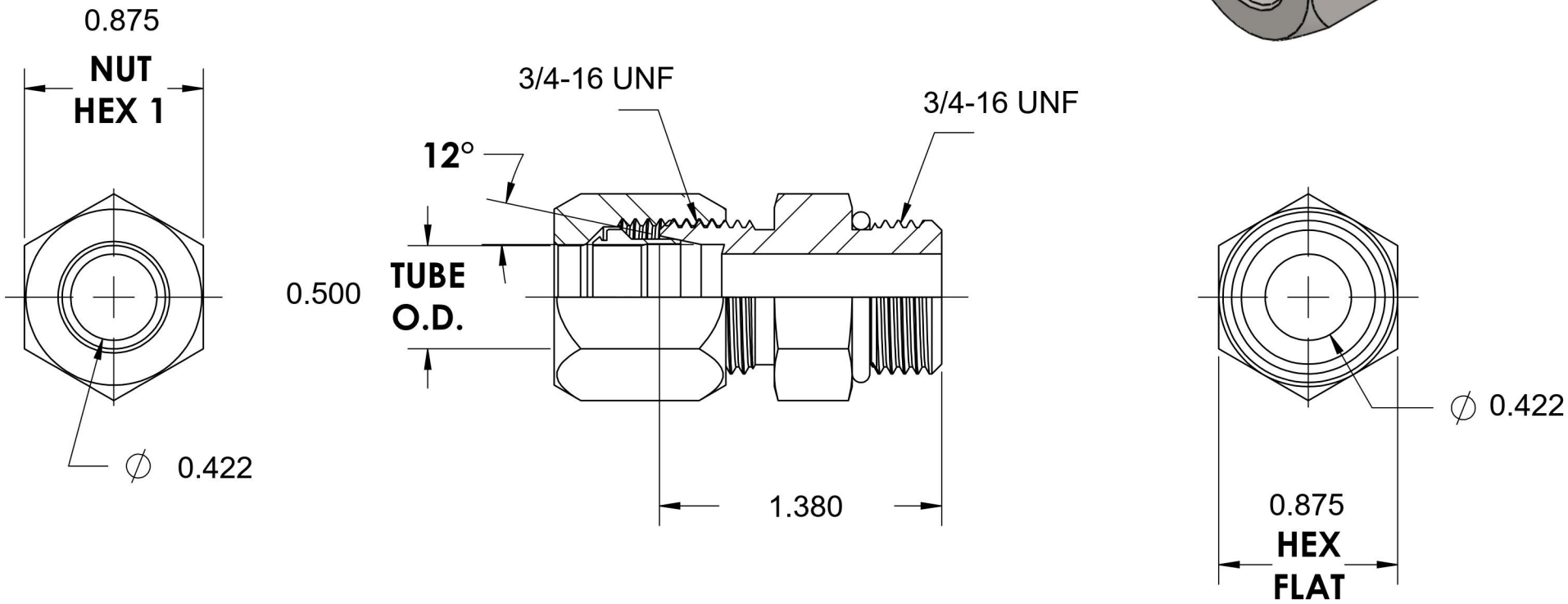

BRENNAN

6701 Cochran Road
Solon, Ohio 44139
Phone: (440) 248-1880
Toll Free: 1-888-331-1523

Temperature Rating	Material	Industry Standards	Series
-40°F to 250°F	316/316L Stainless	SAE J514, SAE J1926	C6400-O
Pressure Rating	**Finish**		**Series Description**
5000psi	Passivation		SAE J514 Flareless Tube Port Connector