7004-32-32-SS

Stainless Steel, SAE J514 37° Flare BSPP Swivel Line Adapter, 2" Male JIC x 2-11 Female BSPP Swivel

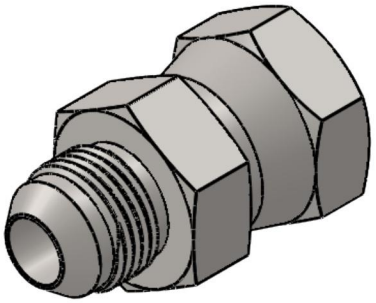

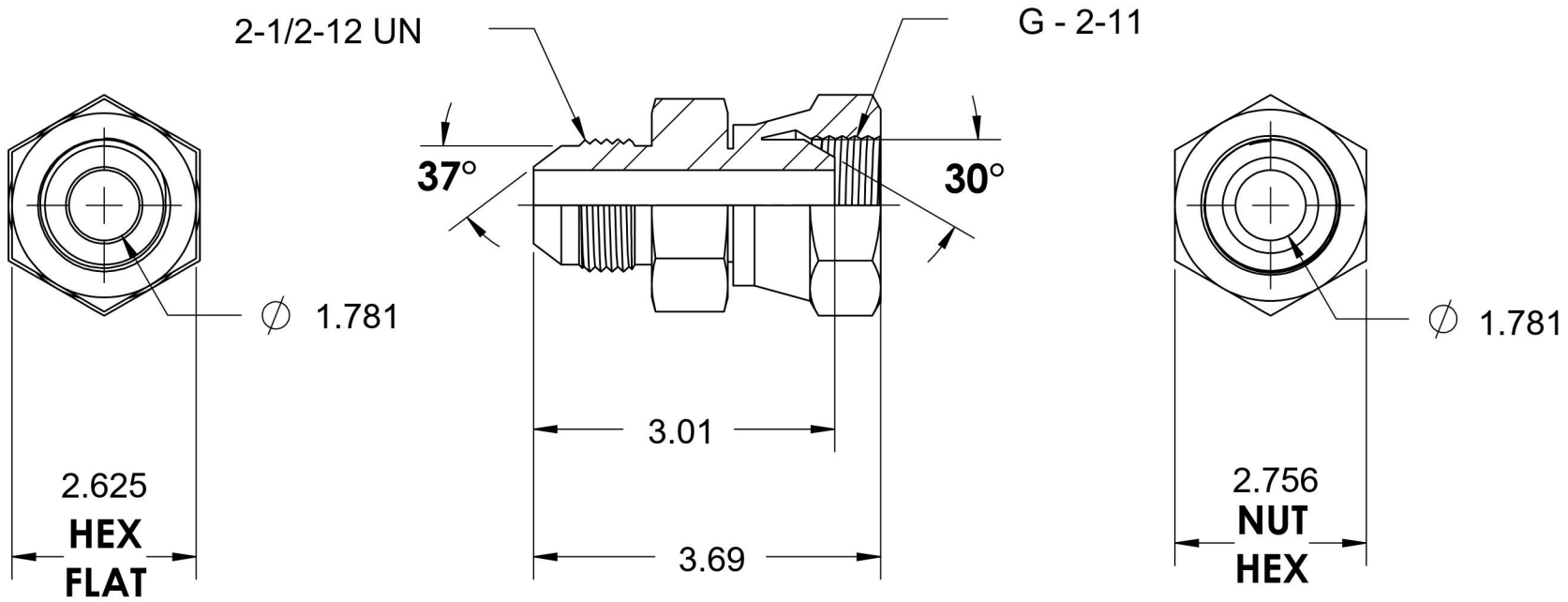

BRENNAN

6701 Cochran Road
Solon, Ohio 44139
Phone: (440) 248-1880
Toll Free: 1-888-331-1523

Temperature Rating	Material	Industry Standards	Series
-425°F to 1200°F	316/316L Stainless Steel	SAE J514, ISO 8434-6	7004-SS
Pressure Rating	**Finish**		**Series Description**
1000 psi	Passivated		SAE J514 37° Flare BSPP Swivel Line Adapter