6600-12-12-10-FG

Steel, SAE J514 37° Flare Swivel Branch Tee, 3/4" Male JIC x 3/4" Male JIC x 5/8" Female JIC Swivel

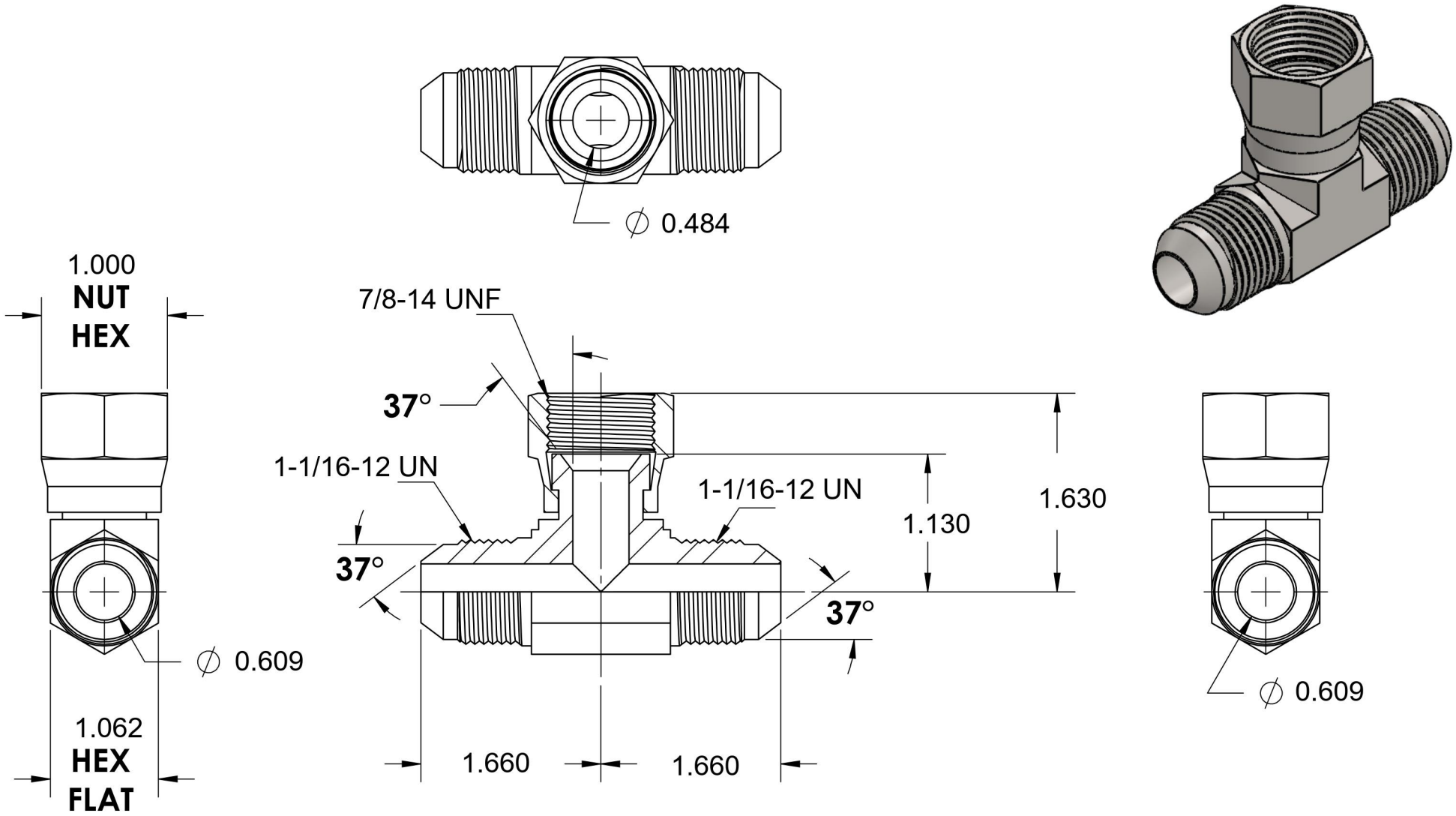

BRENNAN

6701 Cochran Road
Solon, Ohio 44139
Phone: (440) 248-1880
Toll Free: 1-888-331-1523

Temperature Rating	Material	Industry Standards	Series
-65°F to 500°F	C1045 Steel	SAE J514, ASTM B633	6600-FG
Pressure Rating	**Finish**		**Series Description**
5000 psi	Trivalent Zinc		SAE J514 37° Flare Swivel Branch Tee