7205-08-18-NWO-SS

Stainless Steel, SAE J514 37° Flare Male Metric Adjustable (Type H) Port 90° Elbow, 1/2" Male JIC x M18X1.5 Male Metric Adjustable ORR

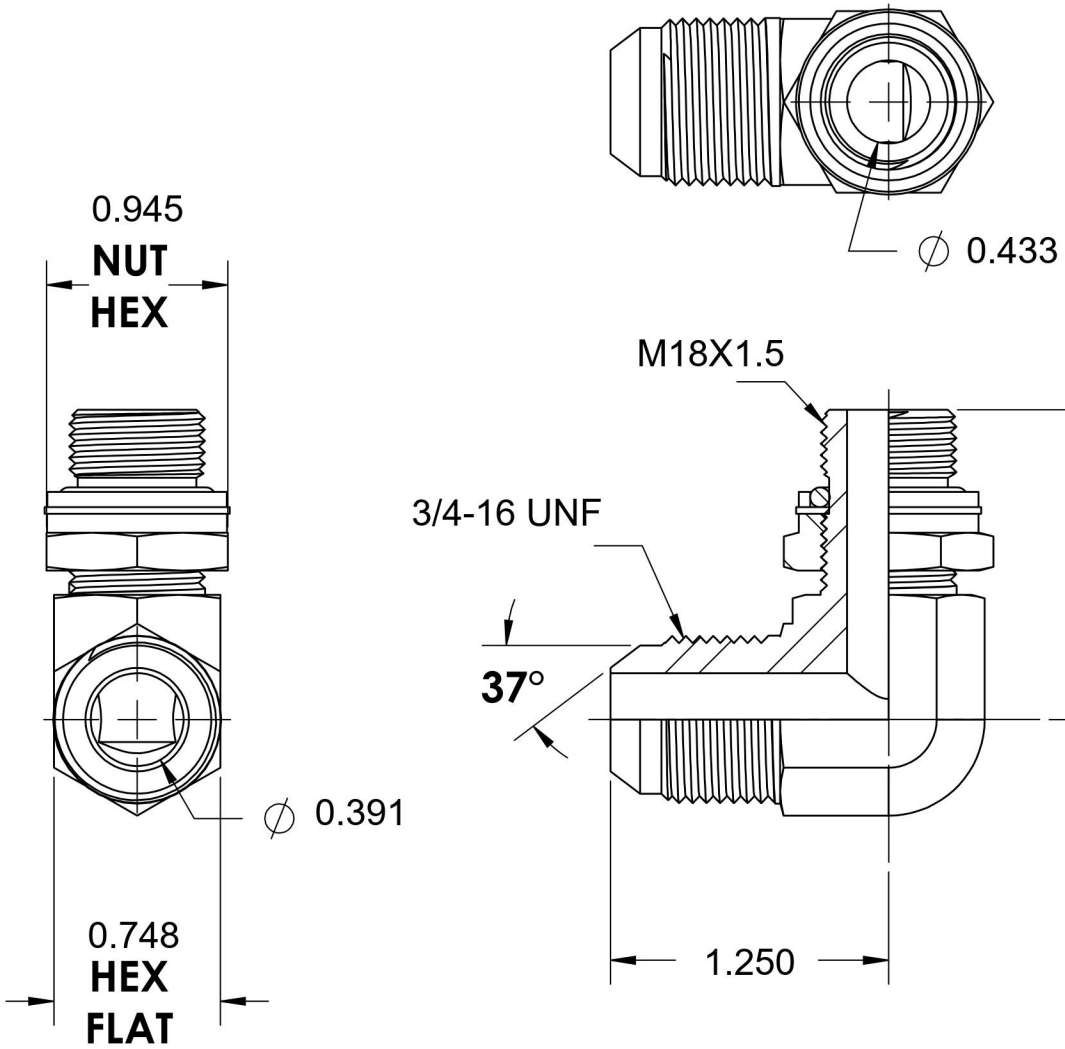

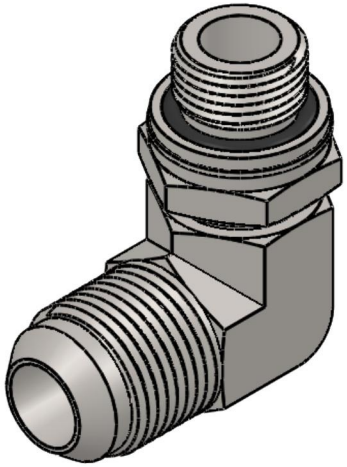

BRENNAN

6701 Cochran Road
Solon, Ohio 44139
Phone: (440) 248-1880
Toll Free: 1-888-331-1523

Temperature Rating	Material	Industry Standards	Series
-40°F to 250°F	316/316L Stainless Steel	SAE J514, ISO 9974	7205-NWO-SS-ORR
Pressure Rating	**Finish**		**Series Description**
3600 psi	Passivated		SAE J514 37° Flare Male Metric Adjustable (Type H) Port 90° Elbow